BRIDGER PARK PICKLEBALL COURTS

1181 N 400 W, LOGAN, UT 84321

SITE PERSPECTIVE

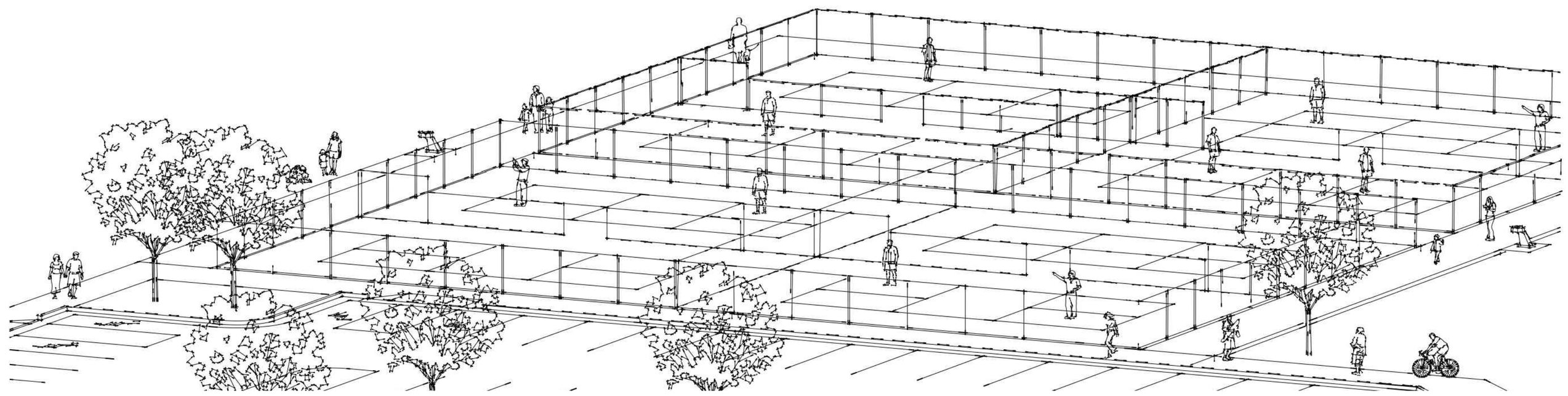

SHEET INDEX

SHEET NO.	TITLE
G-1.0	COVER / SHEET INDEX
D-0.1	SITE SURVEY
C-1.1	SITE LAYOUT PLAN
C-3.0	SITE GRADING & UTILITY PLAN
C-3.1	SWPP INFORMATION PLAN
C-5.1	SITE DETAILS
C-6.0	SITE SPECIFICATIONS
C-6.1	SITE SPECIFICATIONS

VICINITY MAP

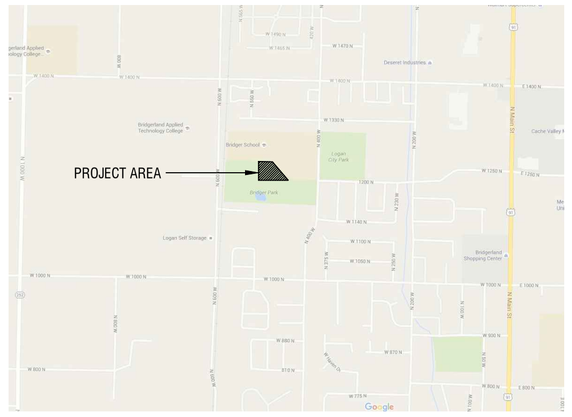

NTS

CONSTRUCTION DOCUMENTS

OWNER/CONTRACTOR
CITY OF LOGAN
195 SOUTH 100 WEST
LOGAN, UTAH 84321
PHONE: 435-716-9250
FAX:
russakina@loganutah.org
CONTACT: RUSS AKINA

LANDSCAPE ARCHITECT
DESIGN WEST ARCHITECTS
255 SOUTH 300 WEST
LOGAN, UTAH 84321
PHONE: 435-752-7031
FAX: 435-752-5325
blakew@designwestarchitects.com
CONTACT: BLAKE WRIGHT

CIVIL ENGINEER
CACHE LANDMARK
1011 W 400 N #130
LOGAN, UTAH 84321
PHONE: 435-713-0099
FAX:
mphillips@cachelandmark.com
CONTACT: MATT PHILLIPS

ELECTRICAL ENGINEER
BEAZER ENGINEERING
525 EAST 3700 SOUTH
MILLVILLE, UTAH 84326
PHONE: 435-753-1250
FAX:
david@beazer-engineering.com
CONTACT: DAVID BEAZER

design west | architects
255 SOUTH 300 WEST LOGAN UT 84321
795 NORTH 400 WEST SALT LAKE CITY UT 84103

BRIDGER PARK PICKLEBALL COURTS
1181 N 400 W, LOGAN, UT 84341
LOGAN CITY
195 S 100 W, LOGAN, UT 84321

MARK:	DATE:	DESCRIPTION:
A	10.04.2016	UPDATED BID SET

PROJECT #: 816069
DRAWN BY: HISLOP
CHECKED BY: WRIGHT
ISSUED: 10/04/16

STATE OF UTAH
BLAKE C. WRIGHT
NO. 10591
LANDSCAPE ARCHITECT

COVER SHEET

G-1.0

© COPYRIGHT DESIGN WEST ARCHITECTS

10/4/16 P:\816069 - Logan City Pickleball Courts_Working\Sheets\C-1.0 COVER SHEET.dwg

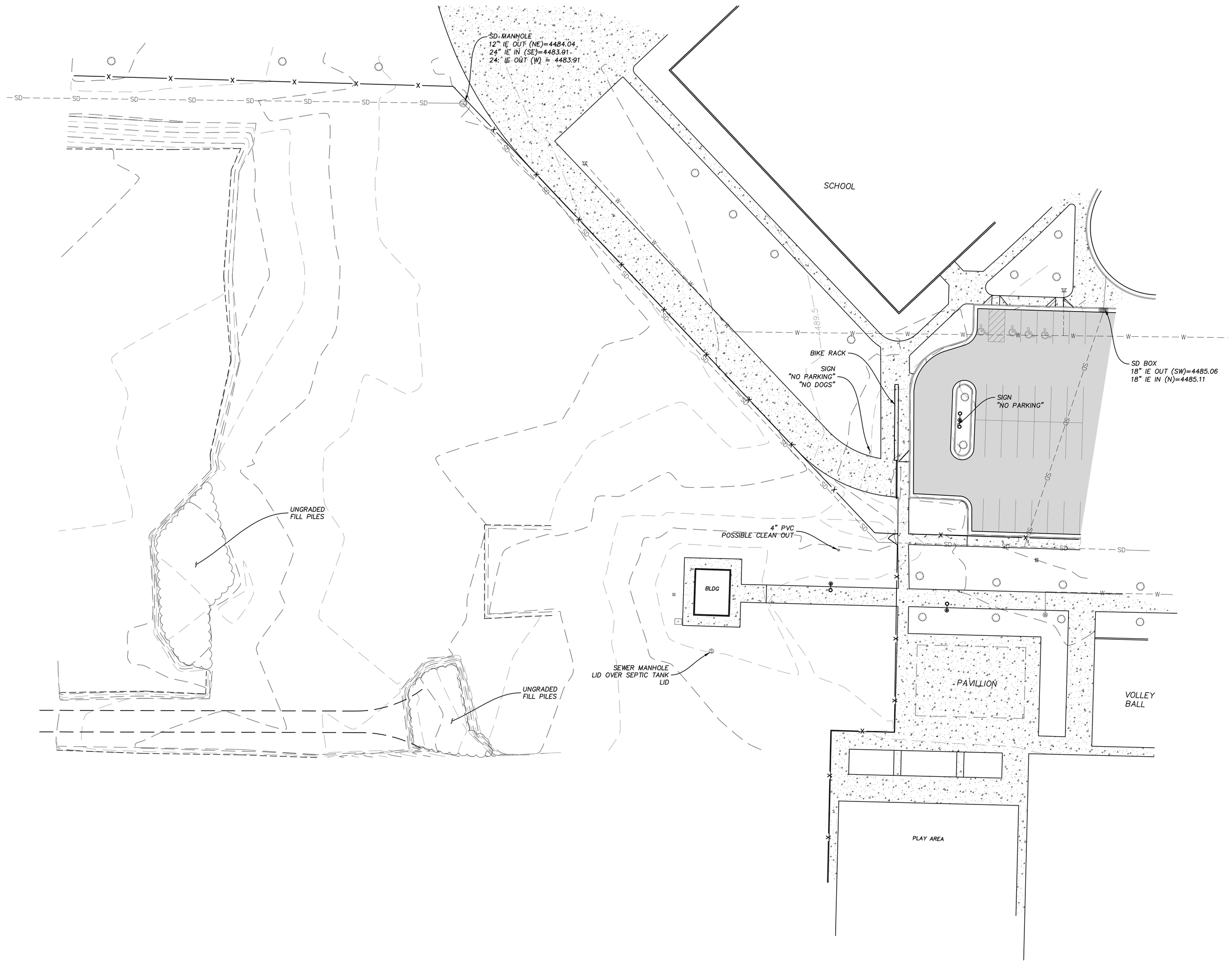

LEGEND

- FENCE
- SANITARY SEWER LINE
- STORM DRAIN LINE
- WATER LINE
- IRRIGATION LINE
- OVERHEAD POWER LINE
- UNDERGROUND POWER LINE
- UNDERGROUND COMMUNICATIONS LINE
- CURB & GUTTER
- ASPHALT
- CONCRETE
- SANITARY SEWER MANHOLE
- SANITARY SEWER CLEANOUT
- STORM DRAIN MANHOLE
- FIRE HYDRANT
- WATER METER
- WATER VALVE
- IRRIGATION CONTROL VALVE BOX
- LIGHT POLE
- TREE
- ELECTRICAL TRANSFORMER/JUNCTION BOX

NO.	DATE:	DESCRIPTION:

PROFESSIONAL ENGINEER
MATTHEW PHILLIPS
NO. 7624266
STATE OF UTAH

SHEET DESCRIPTION:

PICKLE BALL COURTS TOPOGRAPHICAL MAP

BRIDGER PARK
1181 NORTH 400 WEST
LOGAN, UTAH

Cache • Landmark
Engineers
Surveyors
Planners
1011 West 400 North
Suite 130
Logan, UT 84321
435.713.0099

DATE: 4 MARCH 2016
SCALE: 1" = 40'
DESIGN BY: M. PHILLIPS
CHECKED BY: C. REINERT
APPROVED BY: M.PHILLIPS
CLM PROJECT NUMBER: 580-1601
SHEET: D-0.1

PLOTTED March 7, 2016 BY Matt Phillips FILE Z:\2016 PROJECTS\580-1601 BRIDGER PARK\ACAD\SURVEY\TOPOGRAPHY\580-1601 BRIDGER PARK TOPO (CURRENT).DWG

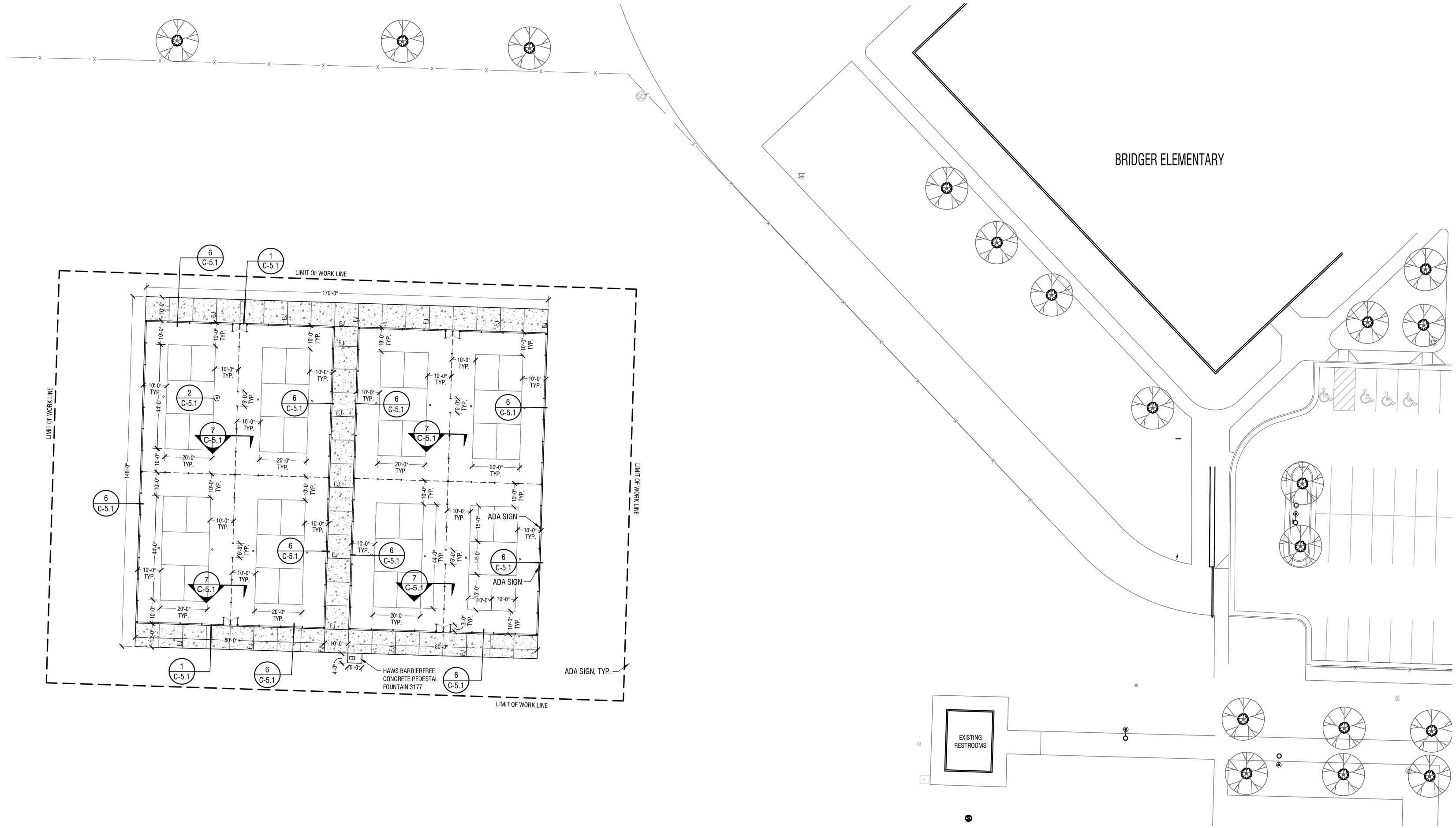

LAYOUT NOTES

1. CONTRACTOR SHALL REPAIR ALL DAMAGES CAUSED BY CONSTRUCTION OPERATIONS (WHICH MAY OCCUR ON OR OFF SITE) TO THE ARCHITECT'S AND OWNER'S SATISFACTION.
2. ALL CONSTRUCTION SHALL MEET CITY OF LOGAN STANDARDS AND SPECIFICATIONS (APWA 2007, AS AMENDED BY LOGAN CITY AS OF DATE APPROVED FOR CONSTRUCTION BY ENGINEER.).
3. COORDINATE SLEEVING FOR FUTURE LIGHTING. SLEEVE SHALL RUN FROM NORTH SIDE OF COURTS TO SOUTH SIDE OF COURTS UNDER CONCRETE WALK.
4. COORDINATE CONSTRUCTION ACCESS TO SITE FROM 600 WEST.
5. COORDINATE STOCK PILE LOCATION WITH CITY.
6. THE WATER METER SETTER MUST HAVE CURRENT LOGAN CITY APPROVED CHECK VALVE; IF THE WATER METER SERVES JUST THE WATER FOUNTAIN AND THE LANDSCAPE IRRIGATION, THE LANDSCAPE IRRIGATION MUST HAVE A HIGH HAZARD RATED BACK FLOW ASSEMBLY ON ITS FEED AND A SEPARATE LINE BEFORE IT TO FEED THE WATER FOUNTAIN AND THE CITY WILL RELY ON THE AIR GAP FOR POINT OF USE PROTECTION.

design west | architects
255 SOUTH 300 WEST LOGAN UT 84321
795 NORTH 400 WEST SALT LAKE CITY UT 84103

BRIDGER PARK PICKLEBALL COURTS

1181 N 400 W, LOGAN, UT 84341

LOGAN CITY
195 S 100 W, LOGAN, UT 84321

MARK:	DATE:	DESCRIPTION:
A	10.04.2016	UPDATED BID SET

PROJECT #: 816069
DRAWN BY: HISLOP
CHECKED BY: WRIGHT
ISSUED: 10/04/16

STATE OF UTAH · GLANE C. WRIGHT · NO. 10590 · LANDSCAPE ARCHITECT

SITE LAYOUT PLAN

C-1.1

© COPYRIGHT DESIGN WEST ARCHITECTS

10/4/16 P:\816069 - Logan City Pickleball Courts_Working\Sheets\C-1.1 SITE LAYOUT.dwg

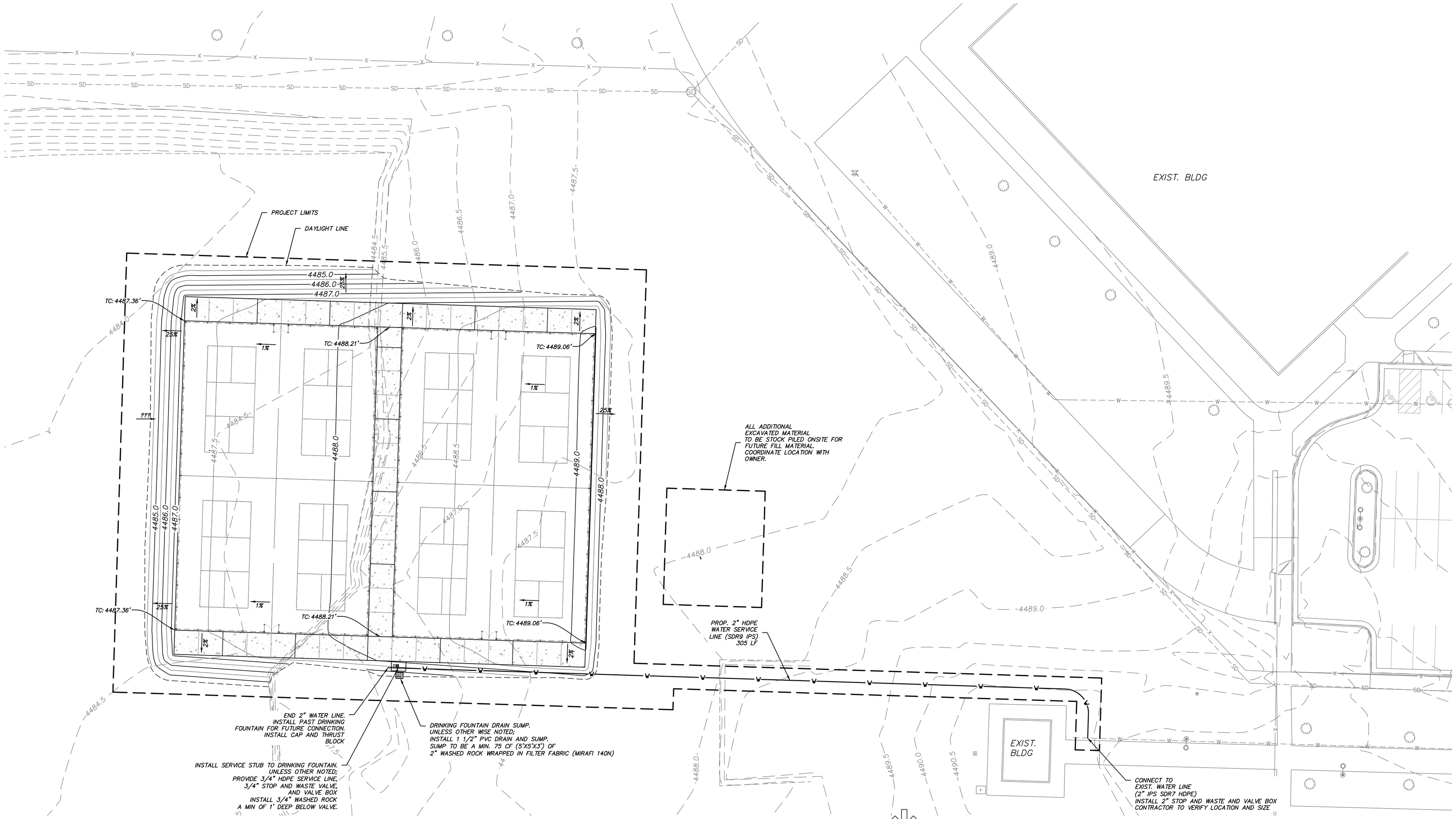

SITE GRADING AND UTILITY PLAN

SCALE: 1" = 20'

GRADING LEGEND

4500.0	EXISTING MAJOR CONTOUR (1 INT)
4500.5	EXISTING MINOR CONTOUR (0.5' INT)
4500.0	PROPOSED MAJOR CONTOUR (1.0' INT)
4500.5	PROPOSED MINOR CONTOUR (0.5' INT)

TA XX.XX	TOP OF ASPHALT
FG XX.XX	FINISHED GRADE
TC XX.XX	TOP OF CONCRETE
TBC XX.XX	TOP OF WALL
TBC XX.XX	TOP BACK OF CURB
(XXXX.X)	EXISTING ELEVATION

GB – GRADE BREAK
AP – ANGLE POINT
PC – POINT OF CURVATURE
PT – POINT OF TANGENCY
FFE – FINISHED FLOOR ELEVATION

GRADING AND UTILITY GENERAL NOTES

1. FINAL GRADES ARE SUBJECT TO MINOR CHANGES AS APPROVED BY OWNER. NO GRADE CHANGES IN EXCESS OF 0.05 FEET WITHOUT CIVIL ENGINEER'S APPROVAL.
2. ALL FILL MATERIAL SHALL BE CLEAN FILL SOIL APPROVED BY CIVIL ENGINEER.
3. GENERAL CONTRACTOR SHALL BE RESPONSIBLE FOR MINIMIZING DEPOSITION OF ON–SITE SEDIMENTS ONTO SURROUNDING STREETS DURING CONSTRUCTION.
4. THE CROSS SLOPE ON ALL NEW CONCRETE WALKS SHALL NOT EXCEED 2.0%.
5. CONTRACTOR SHALL MATCH GRADES AT EXISTING ASPHALT AND EXISTING GROUND SURFACE AT THE PROJECT LIMIT LINES.
6. SLOPE UNIFORMLY BETWEEN CONTOURS AND SPOT ELEVATIONS.
7. ALL CONSTRUCTION TO SHALL MEET CITY OF LOGAN STANDARDS AND SPECIFICATIONS (APWA 2007, AS AMENDED BY LOGAN CITY AS OF DATE APPROVED FOR CONSTRUCTION). STANDARDS AND SPECIFICATIONS CAN BE VIEWED AND PRINTED AT WWW.LOGANUTAH.ORG\PUBLIC_WORKS\ENGINEERING\INDEX.CFM.
8. UTILITY LOCATION SHOWN ON THE PLANS ARE APPROXIMATE ONLY. CONTRACTOR SHALL FIELD VERIFY ALL UTILITY LOCATIONS PRIOR TO EXCAVATING.
9. WHEN GRADE OR LID IS IN GRASSED AREA, INSTALL LID FLUSH WITH EXISTING SOIL UNLESS INSTRUCTED OTHERWISE.
10. GROUT ALL WALL PENETRATIONS WITH CEMENT BASED SHRINKAGE RESISTANT GROUT PER APWA 2007, SECTION 03 61 00.

0 20 40 60 feet
SCALE: 1" = 20'

design west | architects
255 SOUTH 300 WEST LOGAN UT 84321
795 NORTH 400 WEST SALT LAKE CITY UT 84103

BRIDGER PARK PICKLEBALL COURTS

1181 N 400 W, LOGAN, UT 84321

LOGAN CITY
195 S 100 W, LOGAN, UT 84321

MARK:	DATE:	DESCRIPTION:
	10-4-16	ADDENDUM #4

PROJECT #: 816069
DRAWN BY: PHILLIPS
CHECKED BY: ANDERSON
ISSUED: 10/04/16

PROFESSIONAL ENGINEER
MATTHEW PHILLIPS
NO. 7624266
10/4/16
STATE OF UTAH

GRADING AND UTILITY PLAN

C-3.0

© COPYRIGHT DESIGN WEST ARCHITECTS

10/4/16 Z:\2016 Projects\580-1601 Bridger Park\ACAD\Construction Documents\C-3.0 - GRADING PLAN (Current).dwg

STORM WATER POLLUTION PREVENTION INFORMATION

SITE EVALUATION, ASSESSMENT, AND PLANNING

PROJECT SITE/NAME: BRIDGER PARK
PROJECT LOCATION: 1200 N 400 W, SEE COVER SHEET
CITY: LOGAN, UTAH 84321
COUNTY: CACHE
LATITUDE/LONGITUDE (GOOGLE EARTH)
LAT: 41°45'15" NORTH LONG: 111°50'45" WEST

CONTACT INFORMATION AND RESPONSIBLE PARTIES:

OWNER: LOGAN PARKS AND RECREATION
RUSS AKINA
195 SOUTH 100 WEST
LOGAN, UT 84321
(435) 716-9240

PROJECT MANAGER:
RUSS AKINA
LOGAN CITY PARKS AND RECREATION DIRECTOR
195 SOUTH 100 WEST
LOGAN, UT 84321
(435) 716-9240

CITY STORMWATER INSPECTOR
LYNN MAYS
(435) 716-9167
(435) 435-7341

LOGAN CITY PUBLIC WORKS INSPECTOR
KELLY HIGBEE (435) 994-0433

LOGAN CITY LIGHT AND POWER
STEPHEN CROSBY (435) 716-9745

QUESTAR GAS COMPANY
DAN MCDONALD (801) 230-5843

CENTURY LINK
TOM LARSEN (385) 245-6759

CONTRACTOR STORMWATER MANAGER
TBD

CONTRACTOR SWPPP CONTACT/STORMWATER INSPECTOR
TBD

NATURE AND SEQUENCE OF CONSTRUCTION

LOGAN CITY IS GOING TO CONSTRUCT PICKLEBALL COURTS
BEST MANAGEMENT PRACTICES (BMPS) FOR ALL OF THE ACTIVITIES WILL BE APPLIED TO THE SITE WHEN NECESSARY AND MONITORED BY THE CONTRACTOR'S STORM WATER MANAGER AND CONTRACTOR'S ON-SITE INSPECTOR. ADDITIONAL BMPS WILL BE ADDED IF NECESSARY.
THE FUNCTION OF THIS ACTIVITY IS PUBLIC. ESTIMATED START DATE: SUMMER 2016
ESTIMATED COMPLETION: FALL 2016

SOILS, SLOPES, VEGETATION, AND CURRENT DRAINAGE PATTERNS

THE SOILS ON THIS SITE ARE ALLUVIAL OVERBURDEN, MOSTLY GRAVELS AND CLAYS AS OBTAINED THROUGH TEST EXCAVATIONS AND INSPECTION PERFORMED BY ALL POINTS CONSULTING. SLOPES: SLOPES ON THIS PROJECT ARE FLAT. SITE CONDITIONS ARE NOT SUBJECT TO EROSION IN THEIR PRE-CONSTRUCTION CONDITION. DRAINAGE PATTERNS: DRAINAGE PATTERNS ARE FROM EAST TO WEST AS SHOWN IN THE PROFILE. VEGETATION: VEGETATION IS GRASS.

CONSTRUCTION SITE ESTIMATES

DRAINAGE AREA: 0.95 ACRES
CONSTRUCTION SITE AREA TO BE DISTURBED: 0.95 ACRES
TOTAL PROJECT AREA: 0.95 ACRES
PERCENT IMPERVIOUS AREA BEFORE CONSTRUCTION: APPROX. 0%
PERCENT IMPERVIOUS AREA AFTER CONSTRUCTION: APPROX. 60%
RUNOFF COEFFICIENT BEFORE CONSTRUCTION; 70
RUNOFF COEFFICIENT AFTER CONSTRUCTION: 87
DETENTION PROVIDED: 0 ACRE-FEET

RECEIVING WATERS

THE RECEIVING WATER FOR THIS PROJECT IS THE LOGAN NORTHWEST FIELD IRRIGATION TO CUTLER RESERVOIR. THERE ARE NO WETLANDS ON THIS SITE

SITE FEATURES AND SITE SENSITIVE AREAS TO BE PROTECTED

THERE ARE NO SENSITIVE SITE FEATURES OR SENSITIVE AREAS ASSOCIATED WITH THIS PROJECT AS DETERMINED BY THE ENGINEER.

BEST MANAGEMENT PRACTICES (BMP'S)

1. SWEEPING OF ROADS AND PARKING LOTS: SWEEPING OF THE ROADS AND PARKING LOTS EFFECTED BY CONSTRUCTION EQUIPMENT ENTER OR LEAVING THE CONSTRUCTION SITE AND WHERE ANY MATERIAL IS BEING HAULED FROM NOT LESS THAN DAILY AND MORE OFTEN IF DIRECTED BY THE ENGINEER TO AVOID DUST OR GENERAL CONSTRUCTION PERMIT VIOLATIONS.

2. GRASS SEED REVEGETATION: REVEGETATION AT ROADWAY SHOULDER SHALL CONSIST OF THE PLANTING OF GRASS SEEDS AS PROVIDED BY LOGAN CITY OVER ALL AREAS DISTURBED WITH CONSTRUCTION. THE PLANTING SHALL CONSIST OF BROADCAST SPREADING AT THE DENSITY SPECIFIED ON THE PLANS.

3. GRASS SOD: ESTABLISHED PARKSTRIPS SHALL BE PERMANENTLY STABILIZED BY SOD, PURCHASED FROM A LOCAL VENDOR. CONTRACTOR SHALL MONITOR THE SOD UNTIL IT HAS ESTABLISHED.

4. SLOPE EROSION PROTECTION (IF APPLICABLE): SLOPES SHALL BE PROTECTED FROM EROSION BASED ON THE FOLLOWING ASSUMPTIONS:
·SLOPES WITH GRADES UP TO 4H : 1V: HYDROSEEDING WITH A TACKIFIER IS ALLOWED.
·SLOPES WITH GRADES STEEPER THAN 4H :1V: USE COCONUT FIBER EROSION CONTROL MATTING..

5. INLET PROTECTION: INLET PROTECTION SHALL CONSIST OF PLACING FILTER GEOTEXTILE FABRIC PER APWA 2007 AS AMENDED OVER THE CATCH BASIN INLET, AND THEN PLACING CLEAN GRAVEL IN SAND BAGS OR "SOCKS" AND PLACING THE FILTER SOCK OR BAGS AROUND THE INLET ON THE FABRIC TO POND WATER AROUND THE INLET TO SETTLE SEDIMENTS AND FILTER WATER THROUGH THE GRAVEL BAGS, FURTHER REMOVING SEDIMENT. THIS BMP IS CLEANED AFTER EVERY STORM.

6. PORTABLE TOILETS: PORTABLE TOILET FACILITY SHALL BE PROVIDED BY THE CONTRACTOR FOR WORKERS ON THIS PROJECT. THE PORTABLE TOILET SHALL BE PLACED AT A SUITABLE LOCATION THAT IS NOT NEAR A STORM DRAIN INLET OR CURB AND GUTTER AND WHERE ANY SPILLS MAY BE EASILY CLEANED UP WITHOUT RISK TO PEOPLE OR THE ENVIRONMENT. ADDITIONALLY, THE PORTABLE FACILITIES SHALL BE STAKED DOWN PER MANUFACTURERS INSTRUCTION. THE FACILITY SHALL BE SERVICED BY THE PROVIDER AT LEAST WEEKLY.

7. DAILY GARBAGE CLEANUP: CONTRACTOR SHALL MAINTAIN CONSTRUCTION SITE CLEAN OF ALL TRASH AND DEBRIS. GARBAGE, TRASH, AND DEBRIS SHALL BE CLEANED UP DAILY AND REMOVED FROM THE SITE AND DISPOSED OF AT AN APPROVED GARBAGE DISPOSAL SITE.

8. DUST CONTROL: CONTRACTOR SHALL TAKE APPROPRIATE MEASURES TO MINIMIZE DUST ON THIS SITE DURING CONSTRUCTION THROUGH THE UTILIZATION OF WATER OR OTHER APPROPRIATE MEASURES. DUST IS NOT ALLOWED.

9. SILT FENCE: SILT FENCE MAY BE USED AS A PERIMETER BARRIER INSTALLED A SUFFICIENT DISTANCE FROM THE PERIMETER OF DISTURBED AREAS TO PREVENT SEDIMENT FROM MIGRATING AWAY FROM THE SITE.

10. VEGETATED BUFFER: A 50 FOOT VEGETATED BUFFER SHALL BE MAINTAINED BETWEEN THE PROJECT AND ANY SURFACE WATERS. IF IT IS NOT POSSIBLE TO ESTABLISH AND MAINTAIN A 50 FOOT VEGETATED BUFFER, A VEGETATED BUFFER THAT IS LESS THAN 50 FOOT WIDE MAY BE USED AND SHALL BE SUPPLEMENTED WITH ADDITIONAL BMP'S THAT WHEN COMBINED WILL BE EQUIVALENT TO HAVING A 50 FOOT VEGETATED BUFFER. WHEN ALLOWED A BUFFER THAT IS LESS THAN 50 FOOT WIDE, THE AREA OF THE BUFFER SHALL BE IDENTIFIED BY STAKES AND RIBBON OR CONSTRUCTION FENCE TO ENSURE THAT THE BUFFER IS NOT DAMAGED OR IMPOSED UPON BY CONSTRUCTION ACTIVITIES.

11. CONSTRUCTION FENCE: CONSTRUCTION FENCE MAY BE USED AS A PERIMETER BARRIER INSTALLED A SUFFICIENT DISTANCE FROM THE LIMIT OF THE PROJECT. THIS SHALL NOT BE A SUBSTITUTE FOR SILT FENCE. IF USED, CONSTRUCTION FENCE SHALL BE CONTINUALLY MAINTAINED AND IMMEDIATELY REPAIRED IF NEEDED.

12. WADDLES: WADDLE, IF USED, SHALL BE ENTRENCHED AND ANCHORED AS REQUIRED BY THE MANUFACTURER AND COMMON STORMWATER BMP PRACTICE. INSTALLATION DETAILS SHALL BE PROVIDED BY THE CONTRACTOR AND INCLUDED AS PART OF THE SWPPP.

13. TRACKING PADS: TRACKING PADS SHALL BE INSTALLED TO PROTECT THE ROADWAYS AND PARKING LOTS FROM CONTAMINATION WITH SEDIMENT. THE LOCATIONS OF THESE PADS SHALL INCLUDE ALL LOCATIONS WHERE VEHICLES EXIT THE SITE.

14. CONCRETE WASHOUT: A CONCRETE WASHOUT LOCATION SHALL BE PROVIDED AND SIGNED. THE CONCRETE WASHOUT SHALL BE INSTALLED ON THE PAVED SURFACE THAT WILL FULLY CONTAIN ALL CONCRETE WASHOUT MATERIALS AND CONCRETE CLEANUP. THIS WASHOUT SHALL BE LINED WITH PLASTIC (8 MIL MINIMUM) AND A COVERING OF EARTH TO ABSORB ANY LIQUIDS (AS AN ALTERNATIVE, A CHILDREN'S SWIMMING POOL MAY BE USED). AFTER CONSTRUCTION IS COMPLETED, THE WASHOUT SHALL BE REMOVED FROM THE SITE, AND THE CONTAINED MATERIAL DISPOSED OF AT THE LOGAN CITY LANDFILL AS CONSTRUCTION DEBRIS.

15. INSPECTIONS: WEEKLY INSPECTIONS SHALL BE DOCUMENTED ON AN APPROVED INSPECTION FORM ON A WEEKLY BASIS. WEEKLY INSPECTIONS SHALL BE PERFORMED BY A QUALIFIED INDIVIDUAL IN ACCORDANCE WITH REQUIREMENTS OF THE UTAH CONSTRUCTION GENERAL PERMIT (CGP). MAINTENANCE ITEMS SHALL BE CORRECTED WITHIN 24-HOURS. NONCOMPLIANCE ITEMS SHALL BE CORRECTED IMMEDIATELY. CORRECTIVE ACTION SHALL BE NOTED IN THE SWPPP ON THE APPROPRIATE LOG AND DOCUMENTED WITHIN 7-DAYS OF CORRECTION.

POTENTIAL SOURCES OF POLLUTION

POTENTIAL POLLUTANT MATERIAL	ACTUAL POLLUTANT	POLLUTANT SOURCE	MANAGEMENT PRACTICE
SEDIMENT/TOTAL SUSPENDED SOLIDS	SEDIMENT	EROSION OF DISTURBED SOILS	MINIMIZE SOIL DISTURBANCE INSTALL BMPS
SOILS STABILIZATION MATERIAL	VARIOUS MATERIALS BOTH FLOATABLE AND SOLUBLE	DISTURBED AREAS WHERE SLOPES OR SUSCEPTIBLE SOIL TYPES ARE EXPOSED	INSTALL SEDIMENT CONTROL BMPS
CONCRETE-WHITE/ SOLID GREY	LIMESTONE, SAND, PH, CHROMIUM	EXTRA CONCRETE WHEN POURING CONCRETE	CLEAN UP EXCESS AND EXTRA CONCRETE AND DISPOSE OF AT SPECIFIED LOCATION
OILS-BROWN OILY PETROLEUM AND HYDROCARBONS	MINERAL OIL, HYDRAULIC FLUID, MOTOR OIL, ETC.	VEHICLES AND EQUIPMENT USED IN CONSTRUCTION	NO OILS WILL BE CHANGED ON SITE, LEAKS WILL BE REPAIRED IMMEDIATELY.
ASPHALT AND PAVING-BLACK SOLIDS	OIL AND PETROLEUM DISTILLAGES	ASPHALT PAVING OPERATIONS	PAVING OPERATIONS WILL NOT BE PERFORMED WITHIN 8 HOURS OF EXPECTED STORMS EXCEEDING 0.5 INCH.
GREASE	GREASE AND LUBE OIL	VEHICLES AND EQUIPMENT USED IN CONSTRUCTION	KEEP EQUIPMENT CLEAN AND WIPED DOWN
ANTIFREEZE	ETHYLENE GLYCOL	ENGINE COOLANT	FIX LEAKS IMMEDIATELY REPAIRS WILL NOT BE MADE ON SITE
CONSTRUCTION DEWATERING	TSS/SEDIMENTS	DEWATERING ACTIVITIES	PUMP ONTO VEGETATED AREAS OR THROUGH A FILTER BAG
FUELS	BENZENE, ETHYL, BENZENE, TOULENE, XYLENE, MTBE, PETROLEUM DISTALLATE, OILS/ GREASES, NAPHTHALEN, COL OIL	USED IN VEHICLES AND POWER EQUIPMENT	FUELING WILL NOT BE ALLOWED ON SITE UNLESS OVER AN IMPERMEABLE SURFACE WITH AN EMERGENCY CLEANUP KIT AT THE LOCATION
PESTICIDES AND INSECTICIDES, FUNGICIDES, HERBICIDES, AND RODENTICIDES	CHLORINATED HYDROCARBONS, ORANOPHOSPHATES, CARBAMATES, ARSENIC	USED FOR CONTROL OF PESTS DURING REVEGETATION	APPLICATION WILL BE PER MANUFACTURER INSTRUCTIONS EXCESS OR LEFT OVER PESTICIDES WILL BE IMMEDIATELY REMOVED FROM SITE
CONCRETE CURING COMPOUNDS - CREAMY WHITE LIQUID	NAPHTHA	USED TO CONTROL CURING AND SEALING OF CONCRETE	EXCESS COMPOUND WILL BE REMOVED FROM SITE
CONCRETE WASHOUT WATER	PH	CONCRETE TRUCKS AND PUMP TRUCKS	WASH WATER FROM CONCRETE TRUCKS WILL BE CONTAINED AT THE DESIGNATED SITE
TRASH	SOLID WASTES	TRASH LEFT OVER FROM CONSTRUCTION ACTIVITIES	REMOVE ALL TRASH FROM SITE DAILY. DO NOT DISPOSE OF TRASH IN HOLES OR TRENCHES
SANITARY WASTE MANAGEMENT	BACTERIA, PARASITES, VIRUSES	FECAL COLIFORM BACTERIA ASSOCIATED WITH HUMAN OR ANIMAL WASTES	PUBLIC RESTROOMS ARE AVAILABLE ON SITE AND WILL BE AVAILABLE TO CONSTRUCTION WORKERS
FERTILIZERS - LIQUID AND SOLID GRAIN	NITROGEN, PHOSPHORUS	FERTILIZERS USED IN RESTORING VEGETATION	APPLICATION WILL BE PER MANUFACTURER INSTRUCTION. EXCESS WILL BE PROMPTLY REMOVED FROM SITE

ENDANGERED SPECIES

THERE ARE NO KNOW ENDANGERED SPECIES ASSOCIATED WITH THIS SITE.

HISTORIC PRESERVATION

THERE ARE NO KNOW HISTORIC SITES ASSOCIATED WITH THIS PROJECT..

GENERAL LOCATION MAP

FOR THE GENERAL LOCATION MAP, SEE COVER SHEET.

design west | architects
255 SOUTH 300 WEST LOGAN UT 84321
795 NORTH 400 WEST SALT LAKE CITY UT 84103

BRIDGER PARK PICKLEBALL COURTS
1181 N 400 W, LOGAN, UT 84321

LOGAN CITY
195 S 100 W, LOGAN, UT 84321

MARK:	DATE:	DESCRIPTION:
	10-4-16	ADDENDUM #4

PROJECT #: 816069
DRAWN BY: PHILLIPS
CHECKED BY: ANDERSON
ISSUED: 10/04/16

PROFESSIONAL ENGINEER
MATTHEW PHILLIPS
NO. 7624266
10-04-16
STATE OF UTAH

STORM WATER POLLUTION PREVENTION INFORMATION

C-3.1

© COPYRIGHT DESIGN WEST ARCHITECTS

10/4/16 Z:\2016 Projects\580-1601 Bridger Park\ACAD\Construction Documents\C-3.2 - STORM WATER POLLUTION PREVENTION (Current).dwg

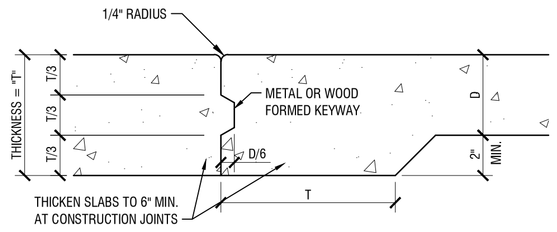

NOTE: TO BE USED AT POUR BREAKS AND WHERE SPECIFIED.

CONSTRUCTION JOINT

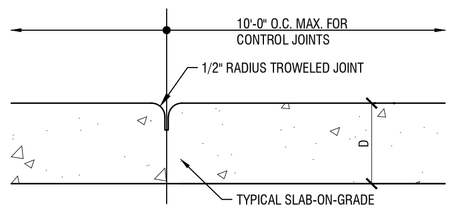

CONTROL JOINT

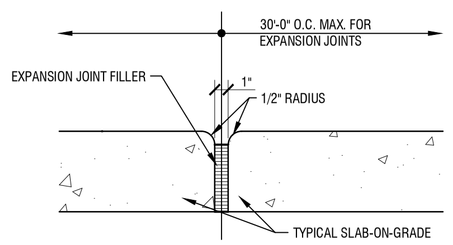

EXPANSION JOINT

5 JOINT SECTIONS

NTS D-SI-WALK-CONC-03

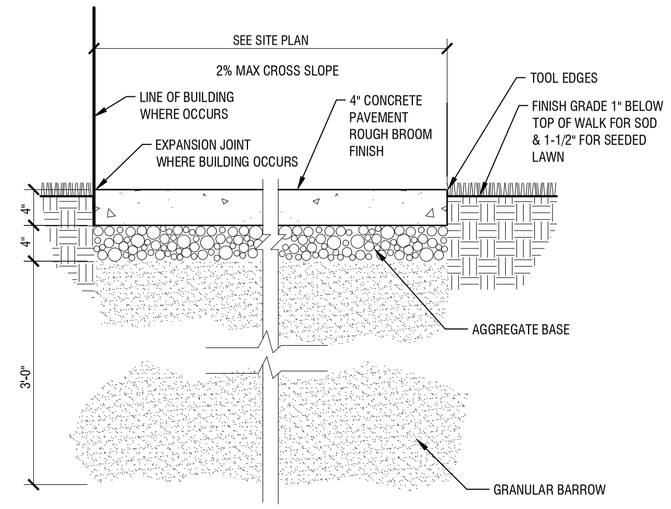

1 CONCRETE WALK

1"=1'-0" P-LO-08

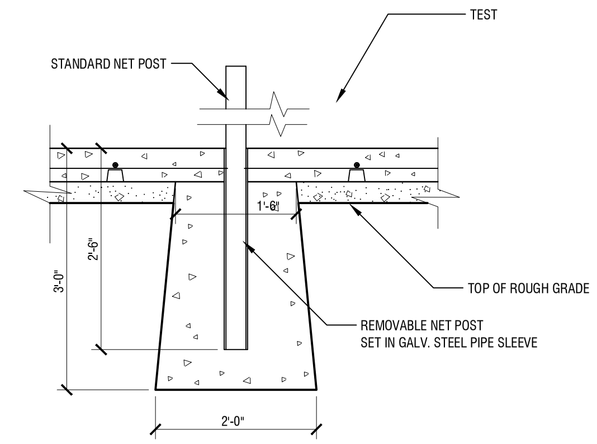

2 TYPICAL NET POST FOUNDATION

3/4" = 1'-0" D-SI-REC-TENN-01

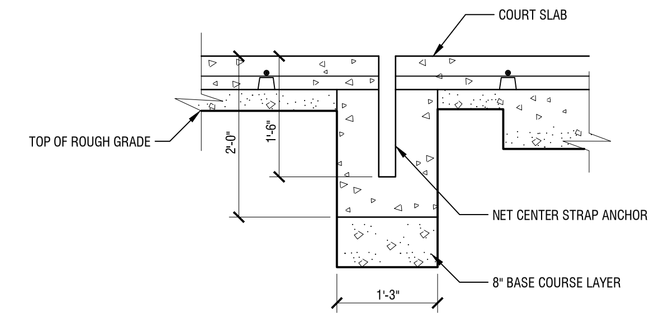

3 TYPICAL NET CENTER STRAP ANCHOR

3/4" = 1'-0" D-SI-REC-TENN-02

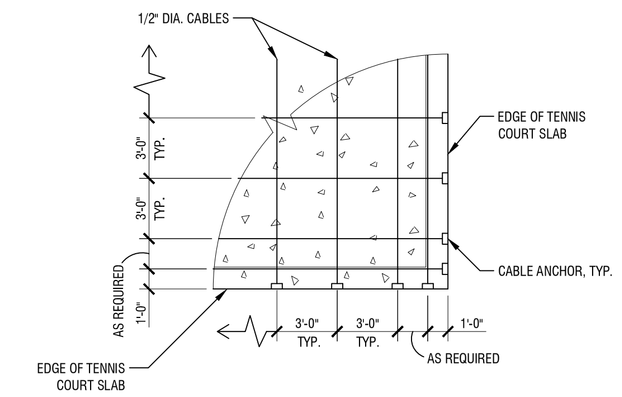

4 TYPICAL CABLE LAYOUT

3/16" = 1'-0" D-SI-REC-TENN-03

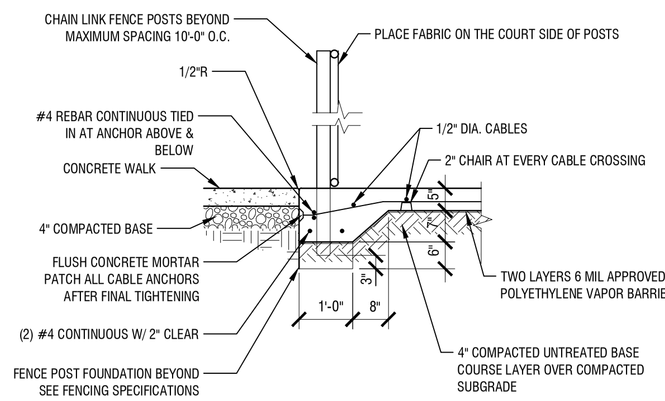

6 TYPICAL PERIMETER BEAM SECTION

1/2" = 1'-0" D-SI-REC-TENN-04

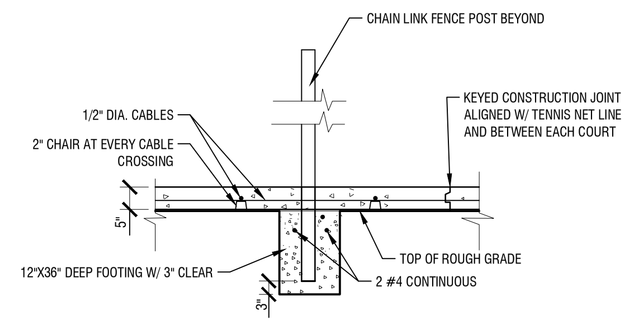

NOTE:
ALL CABLES DAMAGED DURING CONSTRUCTION SHALL BE REPLACED

7 TYPICAL SLAB SECTION

1/2" = 1'-0" D-SI-REC-TENN-05

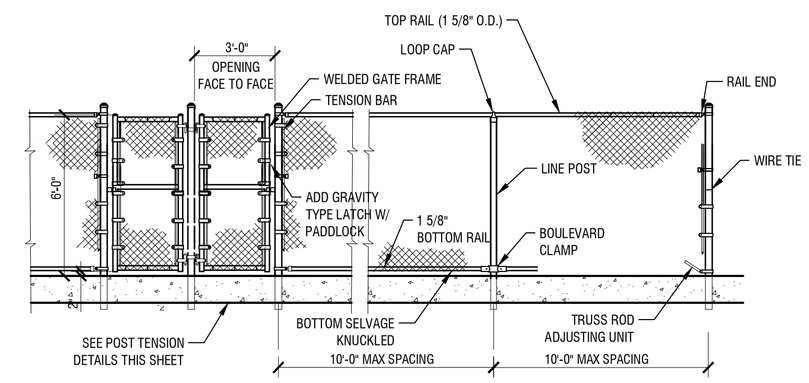

8 PICKLEBALL FENCE DETAIL

1/4" = 1'-0" P-LO-02

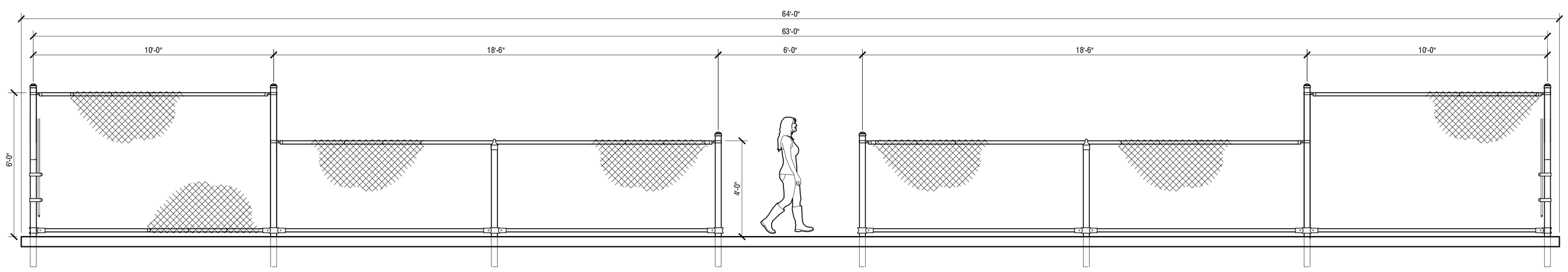

9 PICKLEBALL INSIDE FENCE

3/8" = 1'-0" P-LO-03

design west | architects
255 SOUTH 300 WEST LOGAN UT 84321
795 NORTH 400 WEST SALT LAKE CITY UT 84103

BRIDGER PARK PICKLEBALL COURTS

1181 N 400 W, LOGAN, UT 84341

LOGAN CITY
195 S 100 W, LOGAN, UT 84321

MARK:	DATE:	DESCRIPTION:
1	10.04.2016	UPDATED BID SET

PROJECT #: 816069
DRAWN BY: HISLOP
CHECKED BY: WRIGHT
ISSUED: 10/04/16

STATE OF UTAH · BLAKE C. WRIGHT · NO. 10590 · LICENSED LANDSCAPE ARCHITECT

SITE DETAILS

C-5.1

© COPYRIGHT DESIGN WEST ARCHITECTS

10/4/16 P:\816069 - Logan City Pickleball Courts_Working\Sheets\C-5.1 SITE DETAILS.dwg

BRIDGER PICKLEBALL COURTS
LOGAN, UTAH

SECTION 02751

CEMENT CONCRETE PAVING

PART 1 - GENERAL

1.1 SUMMARY

A. This Section includes concrete paving for curbs, gutters, walkways and pavement.

1.2 SUBMITTALS

A. For each manufactured material and product indicated.

B. Design mixes for each concrete mix indicated.

C. Materials certificates.

1.3 QUALITY ASSURANCE

A. Manufacturer Qualifications: Manufacturer of ready-mixed concrete products complying with ASTM C 94 requirements for production facilities and equipment.

B. ACI Publications: Comply with ACI 301, "Specifications for Structural Concrete", unless modified by the requirements of the Contract Documents.

C. Comply with local governing regulations if more stringent than herein specified.

PART 2 - PRODUCTS

2.1 STEEL REINFORCEMENT

A. Welded Wire Fabric: ASTM A 185, fabricated from as-drawn steel wire into flat sheets.

B. Reinforcing Bars: ASTM A 615, Grade 60 (Grade 420), deformed.

C. Joint Dowel Bars: ASTM A 615, Grade 60, plain steel bars. Cut bars true to length with ends square and free of burrs.

D. Plain Steel Wire: ASTM A 82.

E. Bar Supports: Bolsters, chairs, spacers and other devices for spacing, supporting, and fastening steel reinforcement. Manufacture bar supports according to CRSI's "Manual of Standard Practice."

2.2 FORMS

A. Forms: Steel, wood, or other suitable material of size and strength to resist movement during concrete placement and to retain horizontal and vertical alignment until removal. Use straight forms, free of distortion and defects.

B. Use flexible spring steel forms or laminated boards to form radius bends as required.

C. Coat forms with a non-staining form release agent that will not discolor or deface surface of concrete.

2.3 CONCRETE MATERIALS

A. Concrete Materials: Comply with requirements of applicable Division-3 sections for concrete materials, admixtures, bonding materials, curing materials, and others as required.

2.4 RELATED MATERIALS

A. Expansion and Isolation Joint Materials: ASTM D 1751, asphalt-saturated cellulosic fiber, or ASTM D 1752, cork or self-expanding cork.

B. Detectable Warning Surface - In-line truncated dome pattern that meets ADA requirements height, spacing, size and durability. Provide a color that contrasts visually with the adjoining surfaces (either light-on-dark or dark-on-light). Acceptable products for installation are as follows:

1. Polymer Composite Panel - Polymer Composite, homogenous integral color (UV stable), skid resistant, non-glare finished panel. Use for new construction or retrofit construction.
2. Precast Concrete Panel - High strength concrete with high tensile stainless steel tendons, homogeneous integral color (UV stable), skid resistant panel. Use for new construction, or retrofit construction.

2.5 CONCRETE MIXES AND MIXING

A. Concrete Mixes: Prepare design mixes, proportioned according to ACI 211.1 and ACI 301, with the following properties:
1. Compressive Strength (28 Days): 3000 psi
2. Maximum Water-Cementitious Materials Ratio: 0.45
3. Slump Limit: 4 inches
4. Air Content: 4.5 to 7.5 percent.

B. Synthetic Fiber: Uniformly disperse in concrete mix at manufacturer's recommended rate, but not less than 1.0 lb/cu. yd. (0.60 kg/cu. m).

C. Ready-Mixed Concrete: Comply with requirements and with ASTM C 94 and ASTM C 1116.

D. Project-Site Mixing: Comply with requirements and measure, batch, and mix concrete materials and concrete according to ASTM C 94. Mix concrete materials in appropriate drum-type batch machine mixer.

PART 3 - EXECUTION

3.1 INSTALLATION

A. Surface Preparation: Proof-roll prepared sub base, and remove loose material from surface.

B. Forms: Set, brace, and secure edge forms, bulkheads, and intermediate screed guides for pavement to required lines, grades, and elevations.

C. Reinforcement: Accurately position and support reinforcement, and secure against displacement. Set wire ties with ends directed into concrete.

1. Install welded wire fabric in lengths as long as practicable; lap at least one full mesh, and lace splices with wire.

D. Joints: Locate and install construction, isolation, contraction, and expansion joints as indicated.

E. Concrete Placement: Comply with recommendations in ACI 304R for measuring, mixing, transporting, and placing concrete. Place concrete in a continuous operation within planned joints or sections.

1. Moisten sub base to provide a uniform dampened condition at time concrete is placed.
2. Consolidate concrete by mechanical vibrating equipment supplemented by hand-spading, rodding, or tamping according to recommendations in ACI 309R.
3. Screed and initial-float concrete surfaces with darby or bull float before excess moisture or bleed water appears on the surface.
4. Protect concrete from cold or hot weather during mixing, placing, and curing.

F. Evaporation Retarder: Apply to concrete surfaces if hot, dry, or windy conditions cause moisture loss approaching 0.2 lbs./sq. ft. x h (1 kg/sq. m x h) before and during finishing operations. Apply according to manufacturer's written instructions after placing, screeding, and bull floating or darbying concrete, but before float finishing.

G. Pavement Tolerances: Comply with tolerances in ACI 330.1, "Specification for Plain Concrete Parking Lots."

H. Detectable Warning Surface: Comply with either of the following

1. Polymer Composite Panel Installation:

a. Install cast-in-place detectable warning panel directly into the finished plastic concrete surface in accordance with manufacturer recommendations. Provide a smooth transition between the panel and the surrounding concrete surface.
b. Install surface applied detectable warning panel directly on existing concrete surface in accordance with manufacturer's recommendations and installation procedures. Use mechanical fasteners to secure the panel to the existing surface. Caulk a smooth transition bead along beveled panel edge and surrounding concrete surface.

2. Precast Concrete Panel Installation:

a. Install per manufacturer recommendations for cast-in-place or thin set method. Provide a smooth transition between the panel and the surrounding concrete surface.

3.2 FINISHES AND CURING

A. Float Finish: Begin the second floating operation when bleed-water sheen has disappeared and the concrete surface has stiffened sufficiently to permit operations. Float surfaces to true planes with gaps below 10-foot-long, unleveled straightedge not to exceed 1/4 inch. Cut down high spots, and fill low spots. Refloat surface immediately to uniform granular texture.

1. Burlap Finish: Drag a seamless strip of damp burlap across float-finished concrete, perpendicular to line of traffic, to provide a uniform, gritty texture.
2. Medium-to-Fine- Textured Broom Finish: Draw a soft bristle broom across float-finished concrete surface, perpendicular to line of traffic, to provide a uniform, fine-line texture.
3. Medium-to-Coarse- Textured Broom Finish: Provide a coarse finish by striating float-finished concrete surface 1/16 to 1/8 inch deep with a stiff-bristled broom, perpendicular to line of traffic.

B. Curing: Begin curing after finishing concrete, but not before free water has disappeared from concrete surface. Cure concrete by one or a combination of the following methods:

1. Moisture cure concrete by water, continuous fog spray, continuously wet absorptive cover, or by moisture-retaining-cover curing. Keep surfaces continuously moist for not less than seven days.
2. Curing Compound: Apply uniformly in continuous operation by power spray or roller according to manufacturer's written instructions. Recoat areas subjected to heavy rainfall within three hours after initial application. Maintain continuity of coating and repair damage during curing period.

3.3 REPAIRS AND PROTECTION

A. Remove and replace concrete pavement that is broken, damaged, or defective, or does not meet requirements in this Section.

B. Protect concrete from damage. Exclude traffic from pavement for at least 14 days after placement.

C. Maintain concrete pavement free of stains, discoloration, dirt, and other foreign material. Sweep concrete pavement not more than two days before date scheduled for Substantial Completion inspections.

END OF SECTION

SECTION 311000

SITE CLEARING

PART 1 - GENERAL

1.1 RELATED DOCUMENTS
A. Drawings and general provisions of the Contract, including General and Supplementary Conditions and Division 1 Specification Sections, apply to this Section.

1.2 SUMMARY
A. This Section includes the following:
1. Removing trees and other vegetation.
2. Clearing and grubbing.
3. Topsoil stripping.
4. Removing above-grade site improvements.
5. Disconnecting, capping or sealing, and removing site utilities.
B. Related Sections include the following:
1. Division 1 Section "Temporary Facilities and Controls" for temporary utilities, temporary construction and support facilities, temporary security and protection facilities, and environmental protection measures during site operations.
2. Division 31 Section "Earthwork" for soil materials, excavating, backfilling, and site grading.

1.3 DEFINITIONS
A. Topsoil: Natural or cultivated surface-soil layer containing organic matter and sand, silt, and clay particles; friable, pervious, and black or a darker shade of brown, gray, or red than underlying subsoil; reasonably free of subsoil, clay lumps, gravel, and other objects more than 2 inches (50 mm) in diameter; and free of weeds, roots, and other deleterious materials.

1.4 MATERIALS OWNERSHIP
A. Materials indicated to be stockpiled or to remain are the Owner's property. Cleared materials shall become Contractor's property and shall be removed from the site.

1.5 SUBMITTALS
A. Photographs, DVD or videotape, sufficiently detailed, of existing conditions of trees and plantings, adjoining construction, and site improvements that might be misconstrued as damage caused by site clearing.
B. Record drawings according to Division 1 Section "Closeout Procedures."
1. Identify and accurately locate capped utilities and other subsurface structural, electrical, and mechanical conditions.

1.6 QUALITY ASSURANCE
A. Pre-installation Conference: Conduct conference at Project site to comply with requirements in Division 1 Section "Project Meetings."

1.7 PROJECT CONDITIONS
A. Traffic: Minimize interference with adjoining roads, streets, walks, and other adjacent occupied or used facilities during site-clearing operations.
1. Do not close or obstruct streets, walks, or other adjacent occupied or used facilities without permission from Owner and authorities having jurisdiction.
2. Provide alternate routes around closed or obstructed traffic ways if required by Owner or authorities having jurisdiction.
B. Improvements on Adjoining Property: Authority for performing indicated removal and/or access on property adjoining Owner's property will be obtained by Owner before award of Contract.
C. Salvable Improvements: Carefully remove items indicated to be salvaged and store on Owner's premises where indicated.
D. Notification: Notify utility locator service for area where Project is located before site clearing.

PART 2 - PRODUCTS (NOT APPLICABLE)

PART 3 - EXECUTION

3.1 PREPARATION
A. Protect and maintain benchmarks and survey control points from disturbance during construction.
B. Provide erosion-control measures to prevent soil erosion and discharge of soil-bearing water runoff or airborne dust to adjacent properties and walkways.
C. Locate and clearly flag trees and vegetation to remain or to be relocated.
D. Protect existing site improvements to remain from damage during construction.
1. Restore damaged improvements to their original condition, as acceptable to Owner.

3.2 TREE PROTECTION
A. Erect and maintain a temporary fence around drip line of individual trees or around perimeter drip line of groups of trees to remain. Remove fence when construction is complete.
1. Do not store construction materials, debris, or excavated material within drip line of remaining trees.
2. Do not permit vehicles, equipment, or foot traffic within drip line of remaining trees.
B. Do not excavate within drip line of trees, unless otherwise indicated.
C. Where excavation for new construction is required within drip line of trees, hand clear and excavate to minimize damage to root systems. Use narrow-tine spading forks, comb soil to expose roots, and cleanly cut roots as close to excavation as possible.
1. Cover exposed roots with burlap and water regularly.
2. Temporarily support and protect roots from damage until they are permanently relocated and covered with soil.
3. Coat cut faces of roots more than 1-1/2 inches (38 mm) in diameter with an emulsified asphalt or other approved coating formulated for use on damaged plant tissues.
4. Cover exposed roots with wet burlap to prevent roots from drying out. Backfill with soil as soon as possible.
D. Repair or replace trees and vegetation indicated to remain that are damaged by construction operations, in a manner approved by Architect.
1. Employ a qualified arborist, licensed in jurisdiction where Project is located, to submit details of proposed repairs and to repair damage to trees and shrubs.
2. Replace trees that cannot be repaired and restored to full-growth status, as determined by the qualified arborist.

3.3 UTILITIES
A. Locate, identify, disconnect, and seal or cap off utilities indicated to be removed.
1. Arrange to shut off indicated utilities with utility companies.
B. Existing Utilities: Do not interrupt utilities serving facilities occupied by Owner or others unless permitted under the following conditions and then only after arranging to provide temporary utility services according to requirements indicated:
1. Notify Architect not less than two days in advance of proposed utility interruptions.
2. Do not proceed with utility interruptions without Architect's written permission.
C. Excavate for and remove underground utilities indicated to be removed.

3.4 CLEARING AND GRUBBING
A. Remove obstructions, asphalt & concrete paving, trees, shrubs, grass, and other vegetation to permit installation of new construction. Removal includes digging out stumps and obstructions and grubbing roots.
1. Do not remove trees, shrubs, and other vegetation indicated to remain or to be relocated.
2. Cut minor roots and branches of trees indicated to remain in a clean and careful manner where such roots and branches obstruct installation of new construction.
3. Completely remove stumps, roots, obstructions, and debris extending to a depth of 18 inches (450 mm) below exposed subgrade.
4. Use only hand methods for grubbing within drip line of remaining trees.
B. Fill depressions caused by clearing and grubbing operations with satisfactory soil material, unless further excavation or earthwork is indicated.
1. Place fill material in horizontal layers not exceeding 8-inch (200-mm) loose depth, and compact each layer to a density equal to adjacent original ground.

3.5 TOPSOIL STRIPPING
A. Remove sod, grass, asphalt and concrete paving before stripping topsoil
B. Strip topsoil to whatever depths are encountered in a manner to prevent intermingling with underlying subsoil or other waste materials.
1. Strip surface soil of unsuitable topsoil, including trash, debris, weeds, roots, and other waste materials.
C. Stockpile topsoil materials away from edge of excavations without intermixing with subsoil. Grade and shape stockpiles to drain surface water. Cover to prevent windblown dust.
1. Limit height of topsoil stockpiles to 72 inches (1800 mm).
2. Do not stockpile topsoil within drip line of remaining trees.
3. Dispose of excess topsoil as specified for waste material disposal.
4. Stockpile surplus topsoil and allow for respreading deeper topsoil.

3.6 SITE IMPROVEMENTS
A. Remove existing above- and below-grade improvements as indicated and as necessary to facilitate new construction.
B. Remove slabs, paving, curbs, gutters, and aggregate base as indicated.
1. Unless existing full-depth joints coincide with line of demolition, neatly saw-cut length of existing pavement to remain before removing existing pavement. Saw-cut faces vertically.

3.7 DISPOSAL
A. Topsoil: All salvageable Topsoil is to be stockpiled as described above and is to remain the property of the Owner. Construction Manager will notify Contractor if excess Topsoil becomes available for disposal off site.
B. Disposal: Remove surplus non-topsoil soil material, unsuitable topsoil, obstructions, demolished materials, and waste materials, including trash and debris, and legally dispose of them off Owner's property.

END OF SECTION 311000
SECTION 312200

SITE EXCAVATION AND ROUGH GRADING

PART 1 - GENERAL

1.1 DESCRIPTION
A. Definitions:
1. Unsuitable material: Debris and/or soil material judged unsuitable by Engineer for support of slabs or other site improvements.
2. Engineer: Soils Engineer employed by Owner, empowered to conduct inspections and make approvals.

1.2 QUALITY ASSURANCE
A. Compaction density test:
1. Modified Proctor, ASTM-D 1557.
B. Layout work by Surveyor or Civil Engineer registered in the State of Utah. Identify benchmark to be used in establishing grades.
C. Owner will hire an independent soils laboratory to conduct in place moisture and density tests.
D. Tolerances of sub-grade:
1. Unsurfaced areas: Plus/minus 0.20 FT from required elevations.
2. Paved areas: Plus/minus 0.10 FT from required elevations.

1.3 JOB CONDITIONS
A. Protect existing facilities, utilities (overhead and underground), sidewalks, pavement.
1. Repair damaged items.
2. Notify Owner and make emergency repair as directed.

B. Protect graded areas against erosion.
1. Re-establish grade where settlement or washing occurs at no extra cost.

PART 2 - PRODUCTS

2.1 MATERIALS
A. Fill materials:
1. Reasonably free of roots, organic material, trash, frozen matter, and stones larger than 6 IN.
2. Add water to dry material, as required.
3. Allow wet material to dry, as required.
4. Fill can only be obtained on site where removed from excavating and grading.
5. Provide additional off-site borrow or fill as required.

B. Surplus material:
1. Remove from site.

PART 3 - EXECUTION

3.1 PREPARATION
A. Layout units, structures, piping, roads, parking areas and walks and establish their elevations.
B. Perform other layout work required.
C. Preparation for embankments and fills:
1. Remove topsoil over areas to be cut and filled that was not previously removed by stripping and grubbing.
2. Remove all unconsolidated fill as described in the Geotechnical Investigation report prepared by A Cache Corp, dated November 14, 2013.
3. Before fill is started, scarify to a minimum depth of 6 IN under new roads, parking lots, or streets.
4. Bring to optimum moisture content.
5. Compact to a minimum 95 percent.
6. In areas where existing ground surface is steeper than one vertical to four horizontal, bench surface in order to spread fill horizontally so that fill material will bond with existing surface.

3.2 GENERAL
A. Excavate and grade materials to design elevations.
B. Excavate and grade site to subgrades of paved and unpaved areas as indicated.
C. Excavate for miscellaneous footings, slabs, walks and other structures.
D. Cut and fill as required to bring existing grades to rough grades.
E. Furnish and place additional approved material required to bring subgrade to proper line and grade.
F. During construction, shape and drain embankments and excavation.
G. Maintain ditches and drains to provide drainage.
H. Provide pumping if required.
I. Remove unsuitable materials which cannot be compacted as specified and replace with suitable material.
1. Dispose material on site as directed.
2. Dispose material off site as directed.

J. Remove materials unsuitable to receive fill and replace with suitable material.

3.3 CONSTRUCTION OF EMBANKMENTS AND FILLS
A. Construct embankments and fills to lines and grades.
B. Make completed fill correspond to shape of typical cross section or contour indicated regardless of method used to indicate shape, size, and extent of line and grade of work.
C. Insure that cobbles larger than 4 IN, are not placed in upper 6 IN of fill or embankment.
D. Place material in lifts, maximum 8 IN loose thickness.
E. Place layers horizontally and compact each layer to specified density prior to placing additional fill.
F. Compact using suitable equipment.
1. Control moisture to meet requirements of compaction.
2. Place materials within 3 percent above to 3 percent below optimum moisture content.

G. Under roadways and parking areas and extending 1 FT beyond proposed curb line measured perpendicular from centerline, compact to 95 percent maximum dry density.
H. Under walk paving, compact to 95 percent maximum dry density.
I. For other embankments and fills not listed, compact to 90 percent of maximum dry density.
J. Under proposed building and structures, compact to density as specified in Section 312300.

END OF SECTION 312200

SECTION 312300

EARTHWORK

PART 1 - GENERAL

1.1 RELATED DOCUMENTS
A. Drawings and general provisions of the Contract, including General and Supplementary Conditions and Division 1 Specification Sections, apply to this Section.

1.2 SUMMARY
A. This Section includes the following:
1. Preparing subgrades for slabs-on-grade, walks, pavements, lawns, and plantings.
2. Excavating and backfilling for buildings and structures.
3. Drainage course for slabs-on-grade.
4. Subbase course for concrete walks and pavements.
5. Base course for asphalt paving.
6. Subsurface drainage backfill for walls and trenches.
7. Excavating and backfilling trenches within building lines.
8. Excavating and backfilling trenches for buried mechanical and electrical utilities and pits for buried utility structures.
B. Related Sections include the following:
1. Division 1 Section "Construction Facilities and Temporary Controls."
2. Division 31 Section "Site Clearing" for site stripping, grubbing, removing topsoil, and protecting trees to remain.

1.3 DEFINITIONS
A. Backfill: Soil materials used to fill an excavation.
1. Initial Backfill: Backfill placed beside and over pipe in a trench, including haunches to support sides of pipe.
2. Final Backfill: Backfill placed over initial backfill to fill a trench.
B. Base Course: Layer placed between the subbase course and asphalt paving.
C. Bedding Course: Layer placed over the excavated subgrade in a trench before laying pipe.
D. Borrow: Satisfactory soil imported from off-site for use as fill or backfill.
E. Drainage Course: Layer supporting slab-on-grade used to minimize capillary flow of pore water.
F. Excavation: Removal of material encountered above subgrade elevations.
1. Bulk Excavation: Excavations more than 10 feet (3 m) in width and pits more than 30 feet (9 m) in either length or width.
2. Unauthorized Excavation: Excavation below subgrade elevations or beyond indicated dimensions without direction by Architect. Unauthorized excavation, as well as remedial work directed by Architect, shall be without additional compensation.
G. Fill: Soil materials used to raise existing grades.
H. Structures: Buildings, footings, foundations, retaining walls, slabs, tanks, curbs, mechanical and electrical appurtenances, or other man-made stationary features constructed above or below the ground surface.
I. Subbase Course: Layer placed between the subgrade and base course for asphalt paving, or layer placed between the subgrade and a concrete pavement or walk.
J. Subgrade: Surface or elevation remaining after completing excavation, or top surface of a fill or backfill immediately below subbase, drainage fill, or topsoil materials.
K. Utilities: Utilities include on-site underground pipes, conduits, ducts, and cables, as well as underground services within buildings.

1.4 SUBMITTALS
A. Material Test Reports: From a qualified testing agency indicating and interpreting test results for compliance of the following with requirements indicated:
1. Classification according to ASTM D 2487 of each on-site or borrow soil material proposed for fill and backfill.
2. Laboratory compaction curve according to ASTM D 1557 for each on-site or borrow soil material proposed for fill and backfill.

1.5 PROJECT CONDITIONS
A. Site Information: A Geotechnical Investigation of this site has been prepared. Data on indicated subsurface conditions are not intended as representations or warranties of accuracy or continuity between soil borings. It is expressly understood that Owner will not be responsible for interpretations or conclusions drawn therefrom by Contractor. Data are made available for convenience of Contractor.
1. Additional test borings and other exploratory operations may be made by Contractor at no cost to Owner.
B. No additional monies for exporting or importing of soil.
1. As part of the Construction Documents, Owner may have provided Contractor with a Topographic Survey performed by manual or aerial means. Such Survey was prepared for project design purposes and is provided to the Contractor as a courtesy. It is expressly understood that such survey may not accurately reflect existing topographical conditions and typically will vary from actual conditions by a significant degree. It is the Contractor's responsibility to verify actual existing conditions by whatever means the Contractor deems appropriate. The Contractor shall be responsible for determining their own earthwork quantities and not rely on any estimate prepared by the Owner, its Agents or outside parties. The Contractor is responsible as part of its lump sum bid price for the project, for importing or exporting soils to achieve final sub-grades with suitable soils per the plans and specifications. No additional monies will be allowed beyond the Contractor's Lump Sum Bid Price for the project, for the exporting or importing of soils.
C. Existing Utilities: Locate existing underground utilities in areas of work. If utilities are to remain in place, provide adequate means of support and protection during earthwork operations.
1. Should uncharted, or incorrectly charted, piping or other utilities be encountered during excavation, consult utility owner immediately for directions. Cooperate with Owner and utility companies in keeping respective services and facilities in operation. Repair damaged utilities to satisfaction of utility owner.
2. Do not interrupt utilities serving facilities occupied by Owner or others unless permitted in writing by Architect and then only after arranging to provide temporary utility services according to requirements indicated:
3. Notify Architect not less than seven (7) days in advance of proposed utility interruptions.
4. Do not proceed with utility interruptions without Architect's written permission.
5. Contact utility-locator service for area where Project is located before excavating.
D. Utilities to be removed: Demolish and completely remove from site existing underground utilities indicated to be removed. Coordinate with utility companies to shut off services if lines are active.
E. Protection of Persons and Property: Barricade open excavations occurring as part of this work and post with warning lights.
1. Operate warning lights as recommended by authorities having jurisdiction.

PART 2 - PRODUCTS

2.1 SOIL MATERIALS
A. General: Provide borrow soil materials when sufficient satisfactory soil materials are not available from excavations.
B. Satisfactory Soils: ASTM D 2487 soil classification groups GW, GP, GM, SW, SP, and SM, or a combination of these group symbols; free of rock or gravel larger than 4 inches (100 mm) in any dimension, debris, waste, frozen materials, vegetation, and other deleterious matter.
C. Unsatisfactory Soils: ASTM D 2487 soil classification groups GC, SC, ML, MH, CL, CH, OL, OH, and PT, or a combination of these group symbols.
1. Unsatisfactory soils also include satisfactory soils not maintained within 2 percent of optimum moisture content at time of compaction.
D. Backfill and Fill: Satisfactory soil materials.
E. Subbase: Naturally or artificially well graded mixture of natural or crushed gravel, crushed stone, and natural or crushed sand; ASTM D 2940; with at least 70 percent passing a 3/4- inch (18-mm) sieve and not more than 25 percent passing a No. 200 (0.075-mm) sieve.
F. Base Course: Naturally or artificially graded mixture of natural or crushed gravel, crushed stone, and natural or crushed sand; ASTM D 2940; conforming to the 1 inch gradation requirements of Section 301 of the UDOT Standard Specification for Road and Bridge Construction.
G. Engineered Fill: Naturally or artificially graded mixture of natural or crushed gravel, crushed stone, and natural or crushed sand; ASTM D 2940; with at least 70 percent passing a 3/4-inch (18-mm) sieve and not more than 25 percent passing a No. 200 (0.075-mm) sieve.
H. Bedding: Naturally or artificially graded mixture of natural or crushed gravel, crushed stone, and natural or crushed sand; ASTM D 2940; except with 100 percent passing a 1-inch (25-mm) sieve and not more than 8 percent passing a No. 200 (0.075-mm) sieve.
I. Drainage Fill: Washed, narrowly graded mixture of crushed stone, or crushed or uncrushed gravel; ASTM D 448; coarse-aggregate grading Size 57; with 100 percent passing a 1-1/2- inch (38-mm) sieve and 0 to 5 percent passing a No. 8 (2.36-mm) sieve.
J. Filter Material: Narrowly graded mixture of natural or crushed gravel, or crushed stone and natural sand; ASTM D 448; coarse-aggregate grading Size 67; with 100 percent passing a 1-inch (25-mm) sieve and 0 to 5 percent passing a No. 4 (4.75-mm) sieve.
K. Impervious Fill: Clayey gravel and sand mixture capable of compacting to a dense state.

2.2 ACCESSORIES
A. Warning Tape: Acid- and alkali-resistant polyethylene film warning tape manufactured for marking and identifying underground utilities, 6 inches (150 mm) wide and 4 mils (0.1 mm) thick, continuously inscribed with a description of the utility; colored as follows:
B. Detectable Warning Tape: Acid- and alkali-resistant polyethylene film warning tape manufactured for marking and identifying underground utilities, minimum 6 inches (150 mm) wide and 4 mils (0.1 mm) thick, continuously inscribed with a description of utility, with metallic core encased in a protective jacket for corrosion protection, detectable by metal detector when tape is buried up to 30 inches (750 mm) deep; colored as follows:
1. Red: Electric.
2. Yellow: Gas, oil, steam, and dangerous materials.
3. Orange: Telephone and other communications.
4. Blue: Water systems.
5. Green: Sewer systems.
C. Trace Wire: Insulated 10 gage copper, suitable for direct bury.

PART 3 - EXECUTION

3.1 PREPARATION
A. Protect structures, utilities, sidewalks, pavements, and other facilities from damage caused by settlement, lateral movement, undermining, washout, and other hazards created by earthwork operations.
B. Protect subgrades and foundation soils against freezing temperatures or frost. Provide protective insulating materials as necessary.
C. Provide erosion-control measures to prevent erosion or displacement of soils and discharge of soil-bearing water runoff or airborne dust to adjacent properties and walkways.

3.2 DEWATERING
A. Prevent surface water and ground water from entering excavations, from ponding on prepared subgrades, and from flooding Project site and surrounding area.
B. Protect subgrades from softening, undermining, washout, and damage by rain or water accumulation.
1. Reroute surface water runoff away from excavated areas. Do not allow water to accumulate in excavations. Do not use excavated trenches as temporary drainage ditches.
2. Install a dewatering system to keep subgrades dry and convey ground water away from excavations. Maintain until dewatering is no longer required.

3.3 EXPLOSIVES
A. Explosives: Do not use explosives.

3.4 EXCAVATION, GENERAL
A. Unclassified Excavation: Excavation to subgrade elevations regardless of the character of surface and subsurface conditions encountered, including rock, soil materials, and obstructions.
1. If excavated materials intended for fill and backfill include unsatisfactory soil materials and rock, replace with satisfactory soil materials.

3.5 EXCAVATION FOR STRUCTURES
A. Excavate to indicated elevations and dimensions within a tolerance of plus or minus 0.1 FT (25 mm). Extend excavations a sufficient distance from structures for placing and removing concrete formwork, for installing services and other construction, and for inspections.
1. Excavations for Footings and Foundations: Do not disturb bottom of excavation. If required to not disturb bottom of excavation, excavate by hand to final grade just before placing concrete reinforcement. Trim bottoms to required lines and grades to leave solid base to receive other work.
2. Excavation for Underground Mechanical or Electrical Utility Structures: Excavate to elevations and dimensions indicated within a tolerance of plus or minus 0.1 FT (25 mm). Do not disturb bottom of excavations intended for bearing surface.

3.6 EXCAVATION FOR WALKS AND PAVEMENTS
A. Excavate surfaces under walks and pavements to indicated cross sections, elevations, and grades.

3.7 EXCAVATION FOR UTILITY TRENCHES
A. Trench Excavation: Excavate trenches to indicated gradients, lines, depths, and elevations.
1. Beyond building perimeter, excavate trenches to allow installation of top of pipe below frost line.
2. Trench Clearance: Excavate trenches to uniform widths to provide a working clearance on each side of pipe or conduit. Excavate trench walls vertically from trench bottom to 12 inches (300 mm) higher than top of pipe or conduit, unless otherwise indicated.
3. Clearance: 12 inches (300 mm) on each side of pipe or conduit.
C. Trench Bottoms: Excavate and shape trench bottoms to provide uniform bearing and support of pipes and conduit. Shape subgrade to provide continuous support for bells, joints, and barrels of pipes and for joints, fittings, and bodies of conduits. Remove projecting stones and sharp objects along trench subgrade.
1. For pipes and conduit less than 6 inches (150 mm) in nominal diameter and flat-bottomed, multiple-duct conduit units, hand-excavate trench bottoms and support pipe and conduit on an undisturbed subgrade.
2. For pipes and conduit 6 inches (150 mm) or larger in nominal diameter, shape bottom of trench to support bottom 90 degrees of pipe circumference. Fill depressions with tamped sand backfill.
3. Excavate trenches 6 inches (150 mm) deeper than elevation required in rock or other unyielding bearing material to allow for bedding course.
D. Trench Bottoms: Excavate trenches 4 inches (100 mm) deeper than bottom of pipe elevation to allow for bedding course. Hand excavate for bell of pipe.
1. Excavate trenches 6 inches (150 mm) deeper than elevation required in rock or other unyielding bearing material to allow for bedding course.

3.8 TRENCH SUPPORT SYSTEMS
A. Trench support system shall be suitable for the soil structure, depth of cut, water content of soil, weather conditions, superimposed loads and vibration. Contractor may select one of the following methods of ensuring the safety of workers in the trench, as approved by the Utah State Industrial Commission or its safety inspectors:
1. Sloping the sides of the trench to the angle of repose at which the soil will remain safely at rest.
2. Shoring trench sides by placing sheeting, timber shores, trench jacks, bracing, piles, or other materials to resist pressures surrounding the excavation.
3. Using a movable trench box built-up of steel plates and heavy steel frame of sufficient strength to resist the pressures surrounding the excavation

3.9 APPROVAL OF SUBGRADE
A. Notify Architect when excavations have reached required subgrade.
B. If Architect determines that unsatisfactory soil is present, continue excavation and replace with compacted backfill or fill material as directed.
C. Proof roll subgrade with heavy pneumatic-tired equipment to identify soft pockets and areas of excess yielding. Do not proof roll wet or saturated subgrades.
D. Reconstruct subgrades damaged by freezing temperatures, frost, rain, accumulated water, or construction activities, as directed by Architect.

3.10 UNAUTHORIZED EXCAVATION
A. Fill unauthorized excavation under foundations or wall footings by extending bottom elevation of concrete foundation or footing to excavation bottom, without altering top elevation. Lean concrete fill may be used when approved by Architect.
1. Fill unauthorized excavations under other construction or utility pipe as directed by Architect.

3.11 STORAGE OF SOIL MATERIALS
A. Stockpile borrow materials and satisfactory excavated soil materials. Stockpile soil materials without intermixing. Place, grade, and shape stockpiles to drain surface water. Cover to prevent windblown dust.
1. Stockpile soil materials away from edge of excavations. Do not store within drip line of remaining trees.

3.12 BACKFILL
A. Place and compact backfill in excavations promptly, but not before completing the following:
1. Construction below finish grade including, where applicable, dampproofing, waterproofing, and perimeter insulation.
2. Surveying locations of underground utilities for record documents.
3. Inspecting and testing underground utilities.
4. Removing concrete formwork.
5. Removing trash and debris.
6. Removing temporary shoring and bracing, and sheeting.
7. Installing permanent or temporary horizontal bracing on horizontally supported walls.

3.13 UTILITY TRENCH BACKFILL
A. Place and compact bedding course on trench bottoms and where indicated. Shape bedding course to provide continuous support for bells, joints, and barrels of pipes and for joints, fittings, and bodies of conduits.
B. Backfill trenches excavated under footings and within 18 inches (450 mm) of bottom of footings; fill with concrete to elevation of bottom of footings.
C. Provide 4-inch- (100-mm-) thick, concrete-base slab support for piping or conduit less than 30 inches (750 mm) below surface of roadways. After installing and testing, completely encase piping or conduit in a minimum of 4 inches (100 mm) of concrete before backfilling or placing roadway subbase.
D. Place and compact initial backfill of subbase material, free of particles larger than 1 inch (25 mm), to a height of 12 inches (300 mm) over the utility pipe or conduit.
1. Carefully compact material under pipe haunches and bring backfill evenly up on both sides and along the full length of utility piping or conduit to avoid damage or displacement of utility system.
E. Coordinate backfilling with utilities testing.
F. Place and compact final backfill of satisfactory soil material to final subgrade.
G. Install warning tape directly above utilities, 12 inches (300 mm) below finished grade, except 6 inches (150 mm) below subgrade under pavements and slabs.

3.14 FILL
A. Preparation: Remove vegetation, topsoil, debris, unsatisfactory soil materials, obstructions, and deleterious materials from ground surface before placing fills.
B. Plow, scarify, bench, or break up sloped surfaces steeper than 1 vertical to 4 horizontal so fill material will bond with existing material.
C. Place and compact fill material in layers to required elevations as follows:
1. Under grass and planted areas, use satisfactory soil material.
2. Under walks and pavements, use satisfactory soil material.
3. Under steps and ramps, use engineered fill.
4. Under building slabs, use engineered fill.
5. Under footings and foundations, use engineered fill.

3.15 MOISTURE CONTROL
A. Uniformly moisten or aerate subgrade and each subsequent fill or backfill layer before compaction to within 2 percent of optimum moisture content.
1. Do not place backfill or fill material on surfaces that are muddy, frozen, or contain frost or ice.
2. Remove and replace, or scarify and air-dry, otherwise satisfactory soil material that exceeds optimum moisture content by 2 percent and is too wet to compact to specified dry unit weight.

3.16 COMPACTION OF BACKFILLS AND FILLS
A. Place backfill and fill materials in layers not more than 8 inches (200 mm) in loose depth for material compacted by heavy compaction equipment, and not more than 4 inches (100 mm) in loose depth for material compacted by hand-operated tampers.
B. Place backfill and fill materials evenly on all sides of structures to required elevations, and uniformly along the full length of each structure.
C. Compact soil to not less than the following percentages of maximum dry unit weight according to ASTM D 1557:
1. Under structures, building slabs, steps, and pavements, scarify and recompact top 6 inches (150 mm) of existing subgrade and each layer of backfill or fill material at 95 percent. Compact to 98 percent for fills thicker than 6 feet deep.
2. Under walkways, scarify and recompact top 6 inches (150 mm) below subgrade and compact each layer of backfill or fill material at 95 percent.
3. Under lawn or unpaved areas, scarify and recompact top 6 inches (150 mm) below subgrade and compact each layer of backfill or fill material at 90 percent.

3.17 GRADING
A. General: Uniformly grade areas to a smooth surface, free from irregular surface changes. Comply with compaction requirements and grade to cross sections, lines, and elevations indicated.
1. Provide a smooth transition between adjacent existing grades and new grades.
2. Cut out soft spots, fill low spots, and trim high spots to comply with required surface tolerances.
B. Site Grading: Slope grades to direct water away from buildings and to prevent ponding. Finish subgrades to required elevations within the following tolerances:
1. Lawn or Unpaved Areas: Plus or minus 0.2 FT (25 mm).
2. Walks: Plus or minus 0.1 FT (25 mm).
3. Pavements: Plus or minus 0.1 FT (13 mm).
C. Grading inside Building Lines: Finish subgrade to a tolerance of 0.1 FT (13 mm) when tested with a 10-foot (3-m) straightedge.

3.18 SUBBASE AND BASE COURSES
A. Under pavements and walks, place subbase course on prepared subgrade and as follows:
1. Place base course material over subbase.
2. Compact subbase and base courses at optimum moisture content to required grades, lines, cross sections, and thickness to not less than 95 percent of maximum dry unit weight according to ASTM D 1557.
3. Shape subbase and base to required crown elevations and cross-slope grades.
4. When thickness of compacted subbase or base course is 6 inches (150 mm) or less, place materials in a single layer.
5. When thickness of compacted subbase or base course exceeds 6 inches (150 mm), place materials in equal layers, with no layer more than 6 inches (150 mm) thick or less than 3 inches (75 mm) thick when compacted.
B. Pavement Shoulders: Place shoulders along edges of subbase and base course to prevent lateral movement. Construct shoulders, at least 12 inches (300 mm) wide, of satisfactory soil materials and compact simultaneously with each subbase and base layer to not less than 95 percent of maximum dry unit weight according to ASTM D 1557.

3.19 DRAINAGE COURSE
A. Under slabs-on-grade, place drainage course on prepared subgrade and as follows:
1. Compact drainage course to required cross sections and thickness to not less than 95 percent of maximum dry unit weight according to ASTM D 698.
2. When compacted thickness of drainage course is 6 inches (150 mm) or less, place materials in a single layer.
3. When compacted thickness of drainage course exceeds 6 inches (150 mm), place materials in equal layers, with no layer more than

SECTION 312500

EROSION CONTROL

PART 1 - GENERAL

1.1 SUMMARY

A. This Section covers the work required for erosion control during construction. Any local or State Agency requirements will be considered part of these specifications.

B. Obtain the National Pollution Discharge Elimination System (NPDES) Permit for storm water discharge associated with construction activity.

C. Obtain a UPDES Storm Water General Permit for Construction Activities (Permit #UTR100000) or an alternate individual permit. Applications are available online at www.waterquality.utah.gov/UPDES/stormwater.

PART 2 - PRODUCTS

2.1 SILT FENCE

A. Silt fence shall be a woven fabric that meets the following criteria:

Property	Unit	Test Method	Values
Grab Strength	lbs	ASTMD-4632	90 min
Grab Elongation	%	ASTMD-4632	40 max
Water Flow Rate	gal/min/ft2	ASTMD-4491	15 min
Ultraviolet Stability	%	ASTMD-4355	70% min

PART 3 - EXECUTION

3.1 EXECUTION

A. Silt fence shall be placed in accordance with plans and details. The placement of silt fence and/or bales shall consider drainage paths and intercept drainage prior to leaving the site or entering a storm sewer system. Removal of silt and replacement of silt fence and/or bales shall be on going through the duration of the project to maintain an effective silt removing barrier.

B. Sediment Basin and/or sinks shall be constructed to dimensions shown on the plans. The basins and/or sinks shall be cleaned as required to maintain specified size and depth.

C. All temporary grading of drainage channels, slopes or fills shall be in accordance with Division 31 Section "Earthwork".

END OF DOCUMENT 312500

SECTION 321822

HOT MIX ASPHALT PAVING

Copyright 1998, The American Institute of Architects (AIA)

This Short Language Version (SLV) Section was condensed from the updated Basic Version Section of the same title and number. See Basic Section's Cover for changes from the previous edition of this Section.

Caution: Use SLV Sections for small, simple, private projects that are negotiated rather than bid; for projects limited to traditional materials and methods; and for projects where the Architect has reduced or no contract administration responsibilities.

See Basic Section's Text and Evaluations when editing this SLV Section. The Basic Section contains comprehensive notes and requirements plus a greater number of options.

This SLV Section includes chain-link fence fabric, framing, fittings, swing and slide gates, gate operators, and access control for residential, commercial, and industrial applications. Galvanized-coated, Zn-5-Al-MM alloy-coated (Zinc-5 percent aluminum-mischmetal alloy), aluminum-coated, and PVC-coated steel and aluminum-alloy steel and aluminum chain-link fencing are included.

PART 1 - GENERAL

1.1 SUMMARY

A. Section Includes:

1. Asphalt paving to be used in conjunction with the running track.

1.2 SUBMITTALS

A. Material Certificates signed by material producer and Contractor, certifying that each material item complies with, or exceeds, specified requirements.

1.3 QUALITY ASSURANCE

A. Comply with State highway or transportation department standard specifications, latest edition and with local governing regulations if more stringent than herein specified.

1.4 SITE CONDITIONS

A. Weather Limitations: Apply prime and tack coats when ambient temperature is above 50 deg F and when temperature has not been below 35 deg F for 12 hours immediately prior to application. Do not apply when base is wet or contains an excess amount of moisture.

B. Construct asphalt concrete surface course when atmospheric temperature is above 40 deg F and when base is dry. Base course may be placed when air temperature is above 40 deg F and rising.

C. Grade Control: Establish and maintain required lines and elevations.

PART 2 - PRODUCTS

2.1 ASPHALT MATERIAL

A. Asphalt shall have a maximum aggregate size of ½ inch or 5/8 inches and meet UDOT specifications.

2.2 MIXES

A. Hot-Mix Asphalt: Dense, hot-laid, hot-mix asphalt plant mixes approved by authorities having jurisdiction, designed according to procedures in specification for MOI-960 superpave, and complying with the following requirements:

1. Provide mixes with a history of satisfactory performance in geographical area where project is located.

PART 3 - EXECUTION

3.1 SURFACE PREPARATION

A. Proof-roll prepared sub base using heavy, pneumatic-tired rollers to locate areas that are unsuitable or that require further compaction.

B. Place geotextile fabric, GETOX 315ST by Propex, between subgrade and road base.

C. Immediately before placing asphalt materials, remove loose and deleterious material from substrate surfaces. Ensure that prepared subgrade is ready to receive paving.

1. Sweep loose granular particles from surface if unbound-aggregate base course. Do not dislodge or disturb aggregate embedded in compacted surface of base course.

3.2 HOT-MIX ASPHALT PLACING

A. Machine place hot-mix asphalt on prepared surface, spread uniformly and strike-off. Place areas inaccessible to equipment by hand. Place each course to required grade, cross-section and compacted thickness.

1. Spread mixture at minimum temperature of 250 deg F.
2. Regulate paver machine speed to obtain smooth, continuous surface free of pulls and tears in asphalt-paving mat.

B. Place paving in consecutive strips not less than 10 feet wide, unless infill edge strips of a lesser width are required. Complete base course for a section before placing surface course.

C. Promptly correct surface irregularities in paving course behind paver. Use suitable hand tools to remove excess material forming high spots. Fill depressions with hot-mix asphalt to prevent segregation of mix; use suitable hand tools to smooth surface.

D. Make joints between old and new pavements, or between successive days' work, to ensure continuous bond between adjoining work. Construct joints to have same texture, density and smoothness as other sections of hot-mixed asphalt concrete course. Clean contact surfaces and apply tack coat.

3.3 COMPACTION

A. Begin compaction as soon as placed hot-mix asphalt paving will bear roller weight without excessive displacement. Compact mixture with hot, hand tampers or vibrating plate compactors in areas inaccessible to rollers.

B. Breakdown Rolling: Accomplish breakdown or initial rolling immediately following rolling of joints and outside edge. Repair displaced areas by loosening and filling, if required, with hot material. Examine surface after breakdown rolling for indicated crown, grade and smoothness. Correct lay down and rolling operations to comply with requirements.

C. Intermediate Rolling: Begin intermediate rolling immediately after breakdown rolling while mixture is hot enough to achieve specified density. Continue rolling until hot-mix asphalt course has been uniformly compacted to the following density:

1. Average Density: 92 percent of reference maximum theoretical density according to ASTM D 2041, but not less than 90 percent nor greater than 96 percent. Density shall be tested at Owner's expense.

D. Finish Rolling: Finish roll while mixture is still warm enough for removal of roller marks. Continue rolling until roller marks are eliminated.

E. Protection: After final rolling, do not permit vehicular traffic on pavement.

3.4 INSTALLATION TOLERANCES

A. Thickness: Compact course to produce the thickness of 2 inches indicated within the surface smoothness tolerances.

B. Surface Smoothness: Compact course to produce a surface smoothness within the following tolerances the finished surface shall not deviate more than ¼ inch under a 10 foot straightedge in any direction applied parallel at right angles to centerline of paved area. Surfaces will not be acceptable if exceeding the tolerances for smoothness.

3.5 DISPOSAL

A. Except for material indicated to be recycled, remove excavated materials from Project site and legally dispose of them in an EPA-approved landfill.

END OF SECTION 321822

SECTION 321840

PICKLEBALL FURNISHINGS AND EQUIPMENT

Copyright 1998, The American Institute of Architects (AIA)

This Short Language Version (SLV) Section was condensed from the updated Basic Version Section of the same title and number. See Basic Section's Cover for changes from the previous edition of this Section.

Caution: Use SLV Sections for small, simple, private projects that are negotiated rather than bid; for projects limited to traditional materials and methods; and for projects where the Architect has reduced or no contract administration responsibilities.

See Basic Section's Text and Evaluations when editing this SLV Section. The Basic Section contains comprehensive notes and requirements plus a greater number of options.

This SLV Section includes chain-link fence fabric, framing, fittings, swing and slide gates, gate operators, and access control for residential, commercial, and industrial applications. Galvanized-coated, Zn-5-Al-MM alloy-coated (Zinc-5 percent aluminum-mischmetal alloy), aluminum-coated, and PVC-coated steel and aluminum-alloy steel and aluminum chain-link fencing are included.

PART 2 - GENERAL

1.5 SUMMARY

A. Section Includes:

1. Pickleball furnishings and equipment.

1.6 SUBMITTALS

A. Product Data: Manufacturer's data sheets on each product specified, including detailed installation diagrams and recommended installation methods.

B. Selection Samples: For each product specified, two complete sets of chips representing manufacturer's full range of colors and finishes.

C. Shop Drawings: Indicate all materials, dimensions, welds, finish, etc. for field fabricated items.

D. Maintenance Data: For site furnishings to include in O&M Manuals.

1.7 QUALITY ASSURANCE

A. Furnish paint for touch-up as required.

B. Install pre-manufactured items, poured-in-place or pre-cast items, and all related materials required to complete the work indicated on the drawings and/or specified.

C. Materials Inspection: The Contractor shall inspect all items upon delivery to ensure no damage to material or finish. Minor repairs and/or touch up shall be accepted only upon prior authorization from the landscape architect and shall conform, at minimum, to manufacturer's standards.

1.8 WARRANTY

A. Contractor shall warrant work as provided by the General and Supplementary Conditions and Division 01 Specifications.

PART 3 - PRODUCTS

2.1 MATERIALS

A. Pickleball Post: Douglas - Premier RD-36 Item #63071 & 24" Steel Ground Sleeve Item #63424.

B. Pickleball Net: Douglas - JTN-30 Net Item #20105 - Tapered with Deluxe adjustable Center Strap Item #20600 and Center Pipe Anchor Item #63428.

C. Manufacturer's standard Powder Coat finish. Color: Green or Black as selected by Owner and Architect during submittal process.

D. Installation per manufacturer's written installation procedures and details. Coordinate installation with Post Tensioned Concrete Paving.

E. Douglas Sports, (800) 553.8907 or www.douglas-sports.com, or approved equal.

PART 3 - EXECUTION

3.1 EXAMINATION

A. Examine areas and conditions, with Installer present, for compliance with requirements for correct and level finished grade, mounting surfaces, installation tolerances, and other conditions affecting performance.

B. Proceed with installation only after unsatisfactory conditions have been corrected.

3.2 INSTALLATION

A. Comply with manufacturer's written installation instructions unless more stringent requirements are indicated. Complete field assembly of site furnishings where required.

B. Install furnishings and equipment level, plumb, true, securely anchored and positioned at locations indicated on Drawings.

C. Post Setting: Set cast-in support posts in concrete footing with smooth top, shaped to shed water. Protect portion of posts above footing from concrete splatter. Verify that posts are set plumb or at correct angle and are aligned and at correct height and spacing. Hold posts in position during placement and finishing operations until concrete is sufficiently cured.

D. Touch-up paint, as necessary, all blemishes incurred during shipping or assembly, color as designated, to manufacturer's standards.

E. Reinstallation of existing items shall include the use of all required new fasteners, footings, etc. to result in a fully functional system. Provide touch-up paint as required.

3.3 ADJUSTING

A. Upon completion of the installation of site furnishings, check each item and verify that all equipment is properly installed; verify that all trim is in place; adjust all components as necessary to ensure proper operation; remove all labels from equipment.

B. Make necessary adjustments for safe, efficient and smooth operation.

3.4 PROTECTION

A. Protect installed products until completion of project.

B. Touch-up, repair or replace damaged products after Substantial Completion.

3.5 CLEANING

A. Remove all packing materials from job site.

B. Clean or restore marred surfaces.

END OF SECTION 321840

SECTION 323200

POST-TENSIONED CONCRETE TENNIS COURTS

Copyright 1998, The American Institute of Architects (AIA)

This Short Language Version (SLV) Section was condensed from the updated Basic Version Section of the same title and number. See Basic Section's Cover for changes from the previous edition of this Section.

Caution: Use SLV Sections for small, simple, private projects that are negotiated rather than bid; for projects limited to traditional materials and methods; and for projects where the Architect has reduced or no contract administration responsibilities.

See Basic Section's Text and Evaluations when editing this SLV Section. The Basic Section contains comprehensive notes and requirements plus a greater number of options.

This SLV Section includes chain-link fence fabric, framing, fittings, swing and slide gates, gate operators, and access control for residential, commercial, and industrial applications. Galvanized-coated, Zn-5-Al-MM alloy-coated (Zinc-5 percent aluminum-mischmetal alloy), aluminum-coated, and PVC-coated steel and aluminum-alloy steel and aluminum chain-link fencing are included.

PART 3 - GENERAL

1.9 SUMMARY

A. Section Includes:

1. All required labor, materials, equipment, implements, parts and supplies for the installation of reinforced, post-tensioned concrete tennis courts.

1.10 STANDARDS

A. The work shall be done in a thorough, workmanlike manner by contractors of the American Sports Builders Association, and shall conform to their standards for tennis court construction. Contractor shall have a ASBA Certified Tennis Court Builder on staff. Proof of certification shall be required of successful bidder. Tennis court contractor shall have five (5) similar successful projects.

B. All steel tendon installation, concrete work and stressing of tendons shall be done by selected contractor (no part of work to be subcontracted). This provision intent is to provide continuity and one source responsibility for the integrity of the post-tensioned slabs.

1.3 SUBMITTALS

A. In addition to Product Data for each product specified, submit the following:

1. Shop Drawings: Show locations, details, materials, dimensions, sizes, weights, finishes, operational clearances, and installation of components.

1.2
1.3
1.4 WARRANTY

A. The Contractor shall guarantee the work against defective materials or faulty workmanship for a period of one (1) year and that the colored surface will not wear through for a period of two (2) years from date of completion.

SITE PREPARATION

PART 1 - GENERAL

1.1 DESCRIPTION OF WORK

A. The contract work to be performed under this section consists of furnishing all required labor, materials, equipment, complements, parts and supplies necessary for, or appurtenant to the site preparation, and grading of tennis courts in accordance with these specifications.

PART 2 - MATERIALS

2.1 FINE GRADE MATERIAL

A. Fine grade base material shall be Untreated Base Course per APWA Section 02060 capable of a consistent uniform plane.

PART 3 - EXECUTION

3.1 SUBGRADE

A. Strip the area beneath the tennis courts of all topsoil (organics.) Grade the area to the required depth to accommodate the fine grade base material and concrete thickness and provide a uniform one percent (.83-1%) slope at plus or minus one tenth of a foot (+.1') in one plane. All fills will be placed in six-inch (6") layers and will be compacted to ninety percent (90%) standard density at optimum moisture. The contractor will alert the owner of any "soft spots" or structures that could affect the stability of the slab. Fill material will consist of granular borrow per APWA Section 02055.

B. The site preparation will be done so as to provide positive drainage away from the play courts.

3.2 FINE GRADE

The base material shall be placed with automatic laser-regulated equipment capable of providing a true plane to plus or minus one-quarter inch (+ 1/4"). The depth of the fine grade base material shall be sufficient to develop one-quarter inch (1/4") accuracy.

COURT PAVING

PART 1 - GENERAL

1.1 DESCRIPTION OF WORK

A. The contract work to be performed under this section consists of furnishing all required labor, materials, equipment, implements, parts and supplies necessary for, or appurtenant to, the construction of a five inch (5") thick post-tensioned concrete slab.

PART 2 - MATERIALS

2.1 TENSIONING CABLES AND ANCHORS

A. Post-tensioning strands and anchorages shall conform to the "PTI Guide Specifications for Post-tensioning Materials."

B. The tensioning strands shall consist of one-half inch (1/2") diameter, 7-wire, stress relieved strands, having a guaranteed ultimate tensile strength of 270,000 PSI (270 Kips). Strands shall conform to ASTM-416. Cables shall be fabricated to proper length for each slab, coated with a permanent rust preventative lubricant and encased in slip-age sheathing and shall be repaired with tape prior to concrete placement as necessary. A maximum of six inches (6") exposed strands is permitted at the dead-end anchor.

2.2 CONCRETE COMPRESSIVE STRENGTH

A. The concrete shall have a compressive strength of not less than 4,000 PSI after twenty-eight (28) days. Mix design as follows: cement - type 2, six sack (or achieving minimum of 4000 PSI), air entrainment 4-6.0% water/cement ratio -.45 or less.

PART 3 - EXECUTION

3.1 FORMING

A. Forms shall be accurately set to the lines and to plus or minus one-quarter inch (+1/4") of finished grades indicated on drawings and be securely staked to prevent settlement of movement during placement of concrete. Forms shall remain until concrete has taken final set.

3.2 TENSIONING CABLES AND ANCHORS

A. All cables shall be supported on chairs and loosely tied two inches (2") high at all intersections to prevent vertical and horizontal movement during concrete placement. Care shall be taken to insure that chairs are not tied too tightly as it will increase tendon friction during tensioning. Strands shall be placed as engineered. See drawing details for cable spacing.

B. The perimeter beam cross section is 12'X 12'. The cables are anchored approximately 4" down from the surface of the slab. Two #4 rebar continuous lies longitudinally around the court beam directly inside the cable anchor on top of the cables. Overlapping should be a minimum of 30 diameters.

C. After the forms are removed and the concrete has reached a strength of a minimum of 1,700 PSI, the "half stress" tensioning procedure may begin. Approximately one (1) week later, and once concrete has reached a strength of 2,000 psi, each tendon may be tensioned to a maximum of eighty percent (80%) ultimate breaking strength, and anchored a minimum of seventy percent (70%) ultimate breaking strength.

Ultimate Breaking Strength	80%	70%	
41,300		33,000	28,900

D. The cable ends shall be cut off and cone holes grouted flush with edge of slab. Grout shall be non-shrink grout.

3.3 JOINTS

A. Between each court or at net line, plus or minus one foot (+or-1'), there shall be a keyed construction joint. See plans for location and detailed drawing.

3.4 PLACING

A. A full court shall be placed in one (1) continuous operation. The five inch (5") thick slab will be placed with a sixty foot (60') mechanical screed capable of providing a surface to ± ¼" in 10' at a 1% slope.

B. Note: Finish surface shall not have a water-holding area greater than 1/8" deep (cover a nickel). This is to be determined by flooding the court with water, allowing it to drain for one hour on a 70-degree or warmer day.

3.5 CURING

A. Immediately after finishing, the concrete shall be kept moist for not less than three (3) days by covering with polyethylene, by sprinkling, by ponding or by curing compound (must be compatible with acrylic tennis surfacing material).

CHAIN LINK FENCING (for post-tensioned concrete courts)

PART 1 - GENERAL

1.1 DESCRIPTION OF WORK

A. The contract work to be performed under this section consists of furnishing all required labor, materials, equipment, implements, parts and supplies necessary for, or appurtenant to, the fencing of play courts (tennis and/or basketball) in accordance with these specifications.

PART 2 - MATERIALS

2.1 HEIGHT

A. Height of fence shall be 6'-0" & 4'-0" as shown on drawings.

2.2 FABRIC

A. Nine gauge core, minimum wall thickness of .015 inches over a galvanized substrate. The base metal shall have a minimum breaking strength of five hundred fifty pounds (550 lbs.) and a zinc coat weight of .1503 pounds per square foot of un-coated wire surface. Top and bottom selvage of the fabric shall be knuckled.

B. Zinc-Coated Fabric: ASTM A 392, with zinc coating applied to steel wire mesh fabric after weaving with Class 1, 1.2-oz./sq. ft. minimum coating weight.

C. The tensioning strands shall consist of one-half inch (1/2") diameter, 7-wire, stress relieved strands, having a guaranteed ultimate tensile strength of 270,000 PSI (270 Kips). Strands shall conform to ASTM-416. Cables shall be fabricated to proper length for each slab, coated with a permanent rust preventative lubricant and encased in slip-age sheathing and shall be repaired with tape prior to concrete placement as necessary. A maximum of six inches (6") exposed strands is permitted at the dead-end anchor.

2.3 PIPE AND ACCESSORIES

A. Method of Manufacturing:

1. Pipe used for fence framework shall be cold rolled and electric-resistance-welded from steel conforming to ASTM A-569 and hot dip galvanized to ASTM A-525 G-90 zinc weight both inside and outside the pipe.

B. Posts:

1. All line, terminal and gate posts shall be two and seven eighths inch outside diameter (2-7/8" O.D.) with a wall thickness of eleven gauge (11 Ga.) and minimum yield strength of fifty five thousand pounds per square inch (55,000 PSI).

C. Rail:

1. Top and Bottom rail shall be one and five eighths inch outside diameter (1 5/8" O.D.) pipe with a wall thickness of thirteen gauge (13 Ga.) and a minimum yield strength of fifty five thousand pounds per square inch (55,000 PSI) and provided with seven inch (7") long expansion sleeve couplings.
2. **Note:** Middle rail is required on 12' or 10' where windscreen is used.

D. Accessories:

1. Fabric ties: Eleven gauge (11 Ga.) galvanized steel tie wire to fasten fabric to framework. Tension wire shall be attached to fabric bottom with heavy galvanized hog rings.
2. Tension Wire:
   a. Galvanized-Two (2) strands of twelve and a half gauge (12.5 Ga.) steel wire twisted together.
   b. Vinyl Coated - One (1) strand of (8 Ga.) with a six gauge (6 Ga.) finish.
3. Tension Bands: Beveled edge type with nuts and bolts.
4. Line Post Tops: Heavy galvanized cast from eye top fitting.
5. Terminal Post Tops: Heavy galvanized iron tops of rounded type construction.

E. Gates:

1. Construct gate frames with one and five-eighth inches outside diameter (1 5/8" O.D.) rail material with welded corners. Provide fabric filler same as used in fence and use heavy duty galvanized hardware with lockable latches.

F. Concrete:

1. Concrete shall have four thousand pounds per square inch (4,000 PSI) compressive strength at twenty-eight (28) days.

PART 3 - EXECUTION

3.1 WORKMANSHIP

A. The complete fence shall be plumb, both in line and transverse to the fence, straight and rigid with fabric tightly stretched and held firmly in place. Details of construction not specified shall be performed in keeping with standard good fencing practices. Bottom of chain link shall hang one-half inch (1/2") from tennis surface.

3.2 POSTS

A. Space all posts not more than ten feet (10') apart and set in concrete twenty inches (20") deep and not less than (10") in diameter.

3.3 RAILS

A. Set top and bottom rails as nearly parallel to the finish grade as possible and at the specified height of the fence.

B. Note: Middle rail is suggested on 12' or 10' high fence where windscreen is used.

3.4 FABRIC TIES

A. Provide a minimum of six (6) ties for each ten feet (10') of rail and one (1) tie to each foot of post height. Ties to tension wire shall be made with heavy galvanized hog rings at six (6) per ten feet (10') of tension wire.

3.5 TENSION BANDS

A. Provide one (1) fastener for each one foot (1') of fabric height. (Minimum of 8 bands for 10 ft., 3 bands for 43").

3.6 GATES

A. Gates shall swing easily and hang true and close into the plane of the fence.

PLAY COURT SURFACING (COLOR METHOD)

PART 1 - GENERAL

1.1 DESCRIPTION OF WORK

A. The contract of work to be performed under this section consists of furnishing all required labor, materials, equipment, implements, parts and supplies necessary for, or appurtenant to, surfacing of tennis courts in accordance with these specifications.

1.2 QUALITY ASSURANCE

A. The work shall be done in a thorough, workmanlike manner by member contractors of the American Sports Builders Association, and shall conform to the standards for Tennis court construction. The contractor shall have a ASBA certified court builder on staff.

1.3 GUARANTEE

A. The contractor(s) shall guarantee their respective work against defective materials or faulty workmanship for a period of one (1) year and that the colored surface will not wear through for a period of two (2) years from the date of completion.

1.4 GUARANTEE

A. Application temperature shall be a minimum of 60˚F, and surface temperature not above 130˚F. Do not apply when surface is wet or if rain is imminent or forecast, or if night time temperatures are to be lower than 45˚F. Keep from freezing. Do not store in direct sunlight for an extended period of time. Container shall be closed when not in use.

PART 2 - MATERIALS

2.1 DESCRIPTION

A. This specification covers the application of a new wearing surface for the Plexipave System on new or existing concrete and asphalt surfaces.

B. Note: The success of the surfacing is dependent on a sound base with good surface and perimeter drainage and the asphalt or concrete meeting the requirements of the American Sports Builders Association. Concrete surfaces must have an appropriate vapor barrier below the concrete slab. Surface variation should not exceed one-eighth inch (1/8") in ten feet (10') when measured in any direction with a straightedge.

PART 3 - EXECUTION

3.1 CONCRETE SURFACES CONSTRUCTION (NEW AND EXISTING SURFACES)

A. Surface Preparation:

1. Concrete shall have a wood float or light to medium broom or sweat finish. Check with the surfacing material manufacturer before using any add agents to the concrete for compatibility with the surface material. Concrete must cure for twenty-eight (28) days. Thoroughly remove all dirt, dust, mud, oil and all foreign matter.

B. Concrete Preparer:

1. Uncoated concrete surface must be etched with Concrete Preparer solution according to specification 10.13. After drying, all latent material must be removed from the surface.

C. Primer Coat:

1. Mix and apply California Ti-coat epoxy primer according to specification 10.17. Use only on un-coated surfaces.

D. Acrylic Underlayment:

1. One application of California Acrylic Resurfacer (black) shall be applied to the surface within 1- 3 hours after the application of Ti-Coat and while still tacky to fingertip touch. Dilution with water and sand is required utilizing the following mix:
   a. Acrylic Resurfacer: 55 gal.
   b. Water: 20-40 gal.
   c. Sand: (60 - 80 mesh) 600-900 lbs.
   d. Liquid Yield: 112-138 gal.
   e. Application Rate: 0.07-0.08 gal/square yard

E. Depressions:

1. After the Acrylic Resurfacer has dried, the court shall be flooded to locate depressions covering a nickel. Depressions shall be filled with Court Patch Binder according to specification 10.14 using the following mix:
   a. 100-lbs. 60-80-mesh silica sand (dry).
   b. 3 Gallons Plexipave Court Patch Binder.
   c. 1 - 2 gallons Portland Cement, Type 1 (20 lbs. Min.)

F. Tack Coat:

1. A tack coat is necessary under patches only and shall be mixed as follows:
   a. Plexipave Court Patch Binder diluted with one (1) part Court Patch Binder to two (2) parts water and allowed to thoroughly dry prior to patching. After patching the surface shall not vary more than one-eighth inch (1/8") in ten feet (10') measured in any direction.

G. Fortified Plexipave Job Mix Sand Design:

1. Fortified Plexipave Acrylic textured coats shall be applied by rubber bladed squeegee on a clean, dry underlying surface in two (2) applications to obtain a total quantity of not less than 0.07-0.05 gallons per square yard of area, depending on the surface and number of coats applied. Dilution with Plexichrome and water to obtain proper application consistency will be as follows:
   a. Plexichrome - 30 gallons
   b. Water - 20 gallons
   c. 200 lbs. of 50-70 mesh silica sand.
2. The finished surface shall have a uniform appearance and be free from ridges and tool marks.

H. Playing Lines:

1. Two inch (2") wide textured playing lines shall be accurately located, marked and painted with Plexicolor Line Paint as specified by the USAPA.

END OF SECTION 323200

design west | architects
255 SOUTH 300 WEST LOGAN UT 84321
795 NORTH 400 WEST SALT LAKE CITY UT 84103

BRIDGER PARK PICKLEBALL COURTS

1181 N 400 W, LOGAN, UT 84341

LOGAN CITY
195 S 100 W, LOGAN, UT 84321

MARK:	DATE:	DESCRIPTION:
A	10.04.2016	UPDATED BID SET

PROJECT #: 816069
DRAWN BY: HISLOP
CHECKED BY: WRIGHT
ISSUED: 10/04/16

STATE OF UTAH BLAKE C. WRIGHT NO. 10580101 LICENSED LANDSCAPE ARCHITECT

SHEET SPECIFICATIONS

C-6.1

© COPYRIGHT DESIGN WEST ARCHITECTS

10/4/16 P:\816069 - Logan City Pickleball Courts_Working\Sheets\C-6.1 SHEET SPECIFICATIONS.dwg